Route 50 STARS Safety and Operational Improvements Study - Arlington County

ALTERNATIVE 1a: RAISED MEDIAN WITH LEFT-TURN LANES AT IRVING STREET AND FILLMORE STREET

Alt 1a

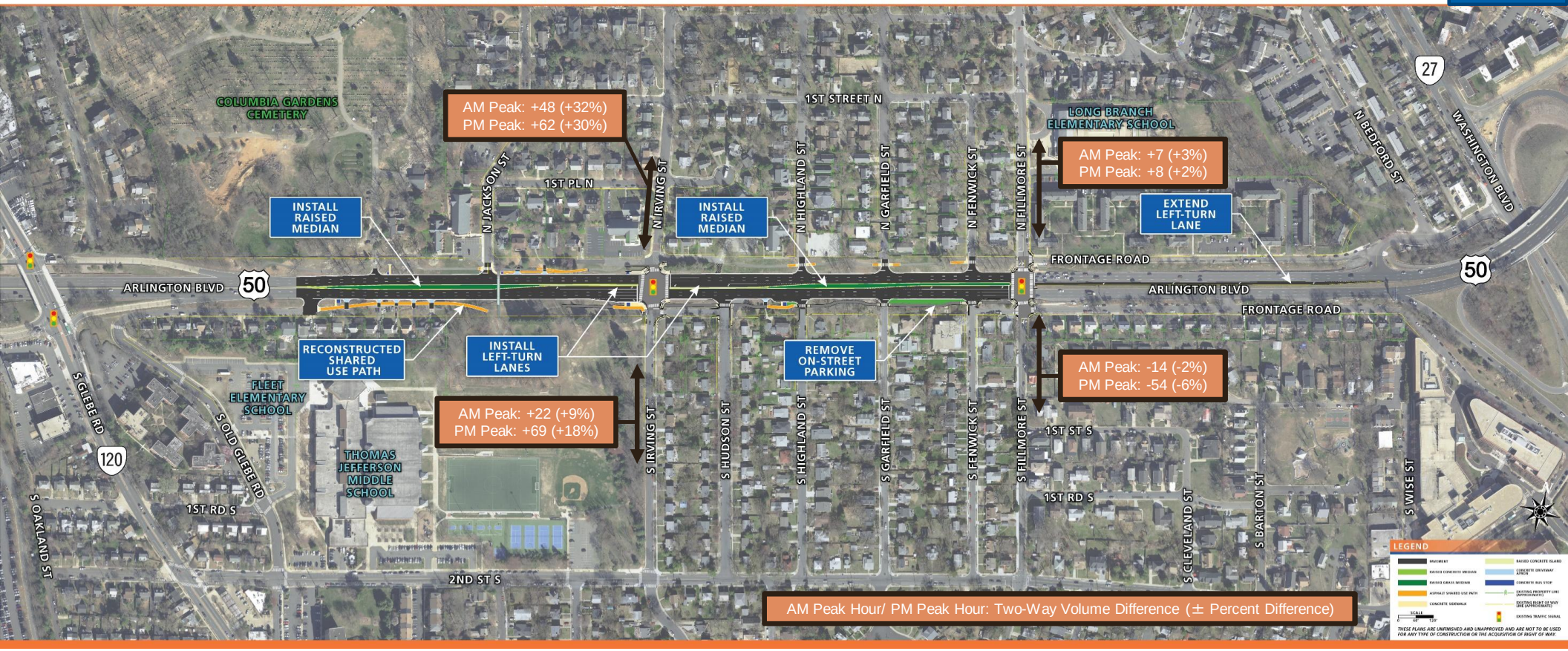

ALTERNATIVE 1b: RAISED MEDIAN WITH LEFT-TURN LANES AT IRVING STREET AND FILLMORE STREET

Alt 1b

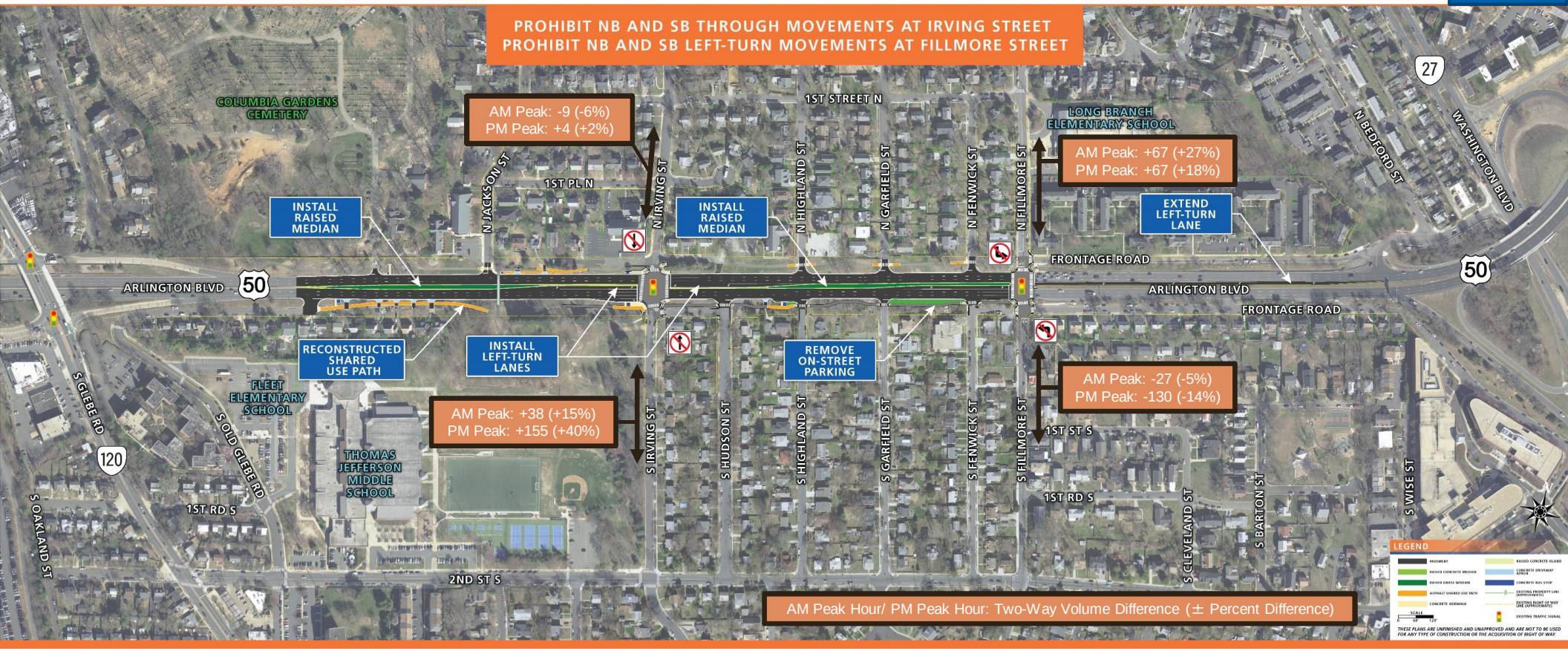

ALTERNATIVE 1c: RAISED MEDIAN WITH LEFT-TURN LANES AT IRVING STREET AND FILLMORE STREET

Alt 1c

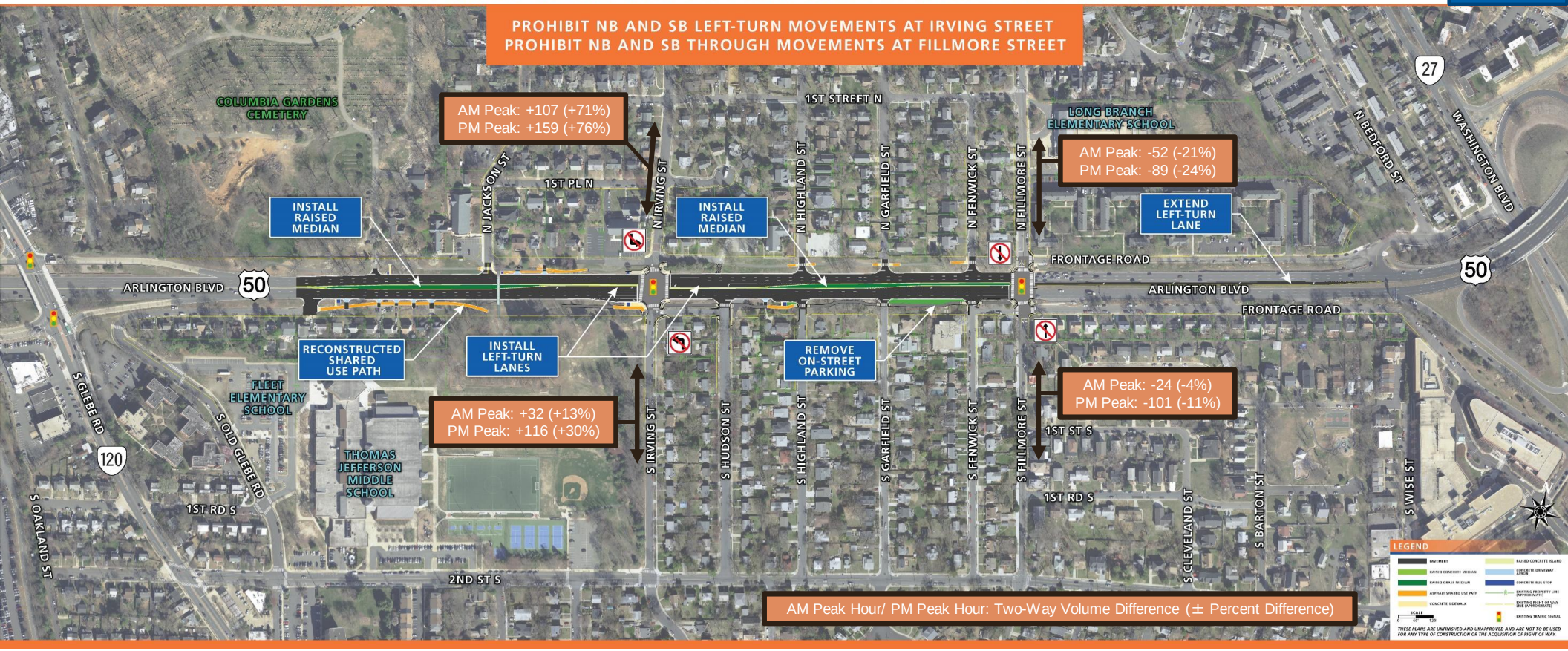

ALTERNATIVE 2: RAISED MEDIAN WITH LEFT-TURN LANES AT FILLMORE STREET

Alt 2

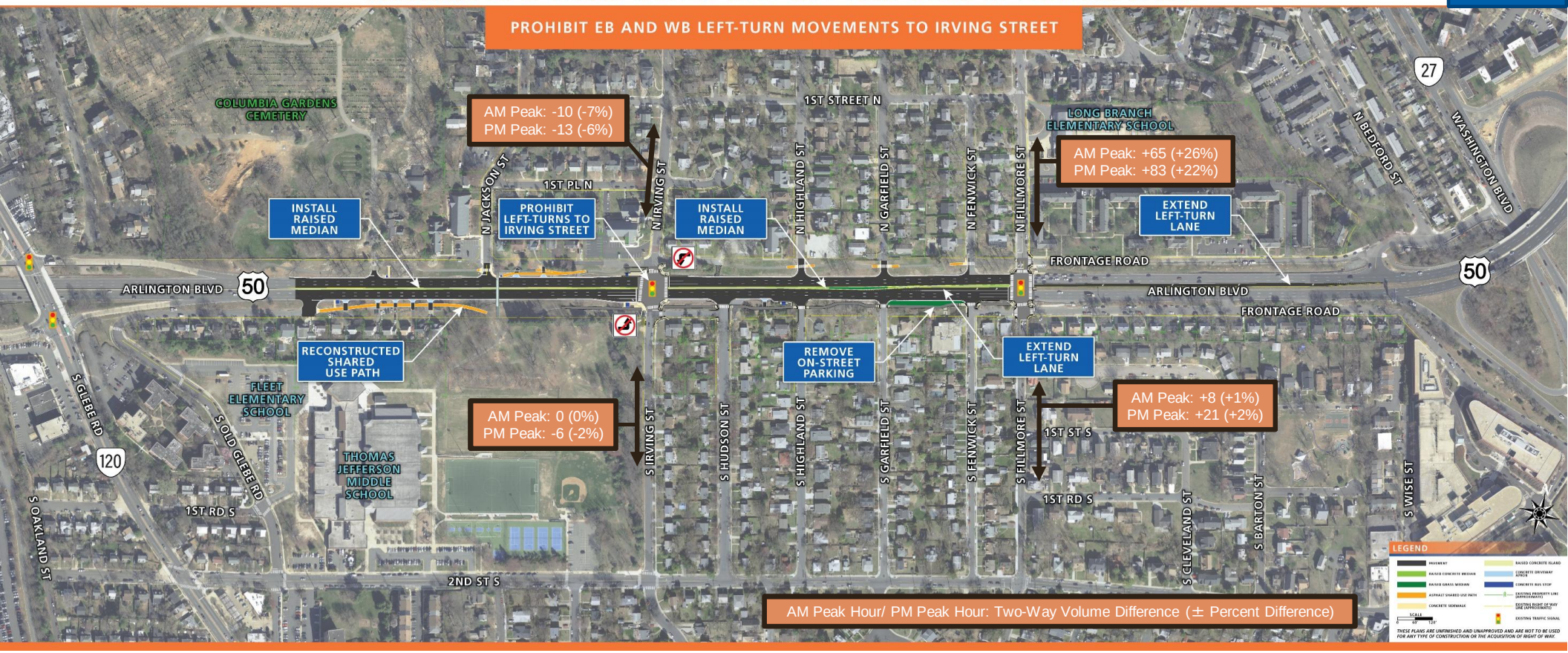

ALTERNATIVE 3: NO LEFT TURNS AT UNSIGNALIZED INTERSECTIONS

Alt 3

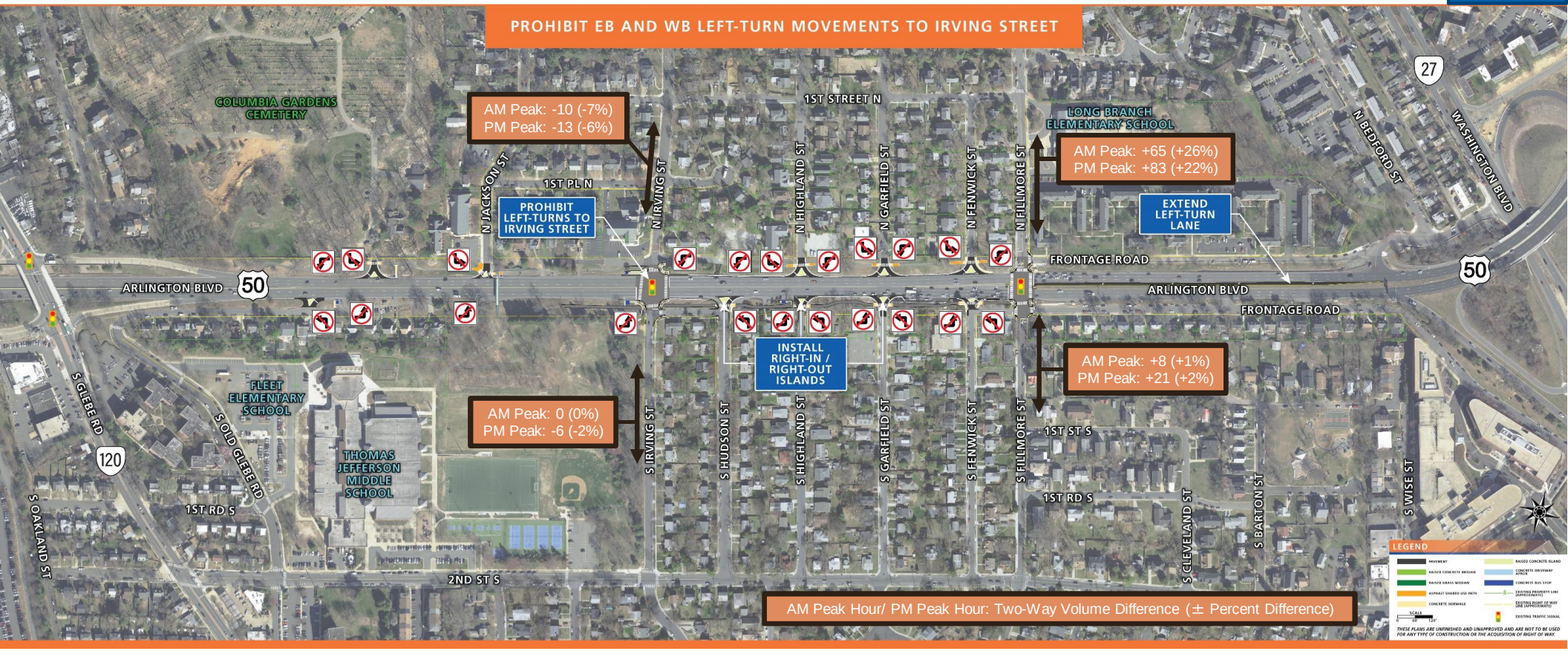

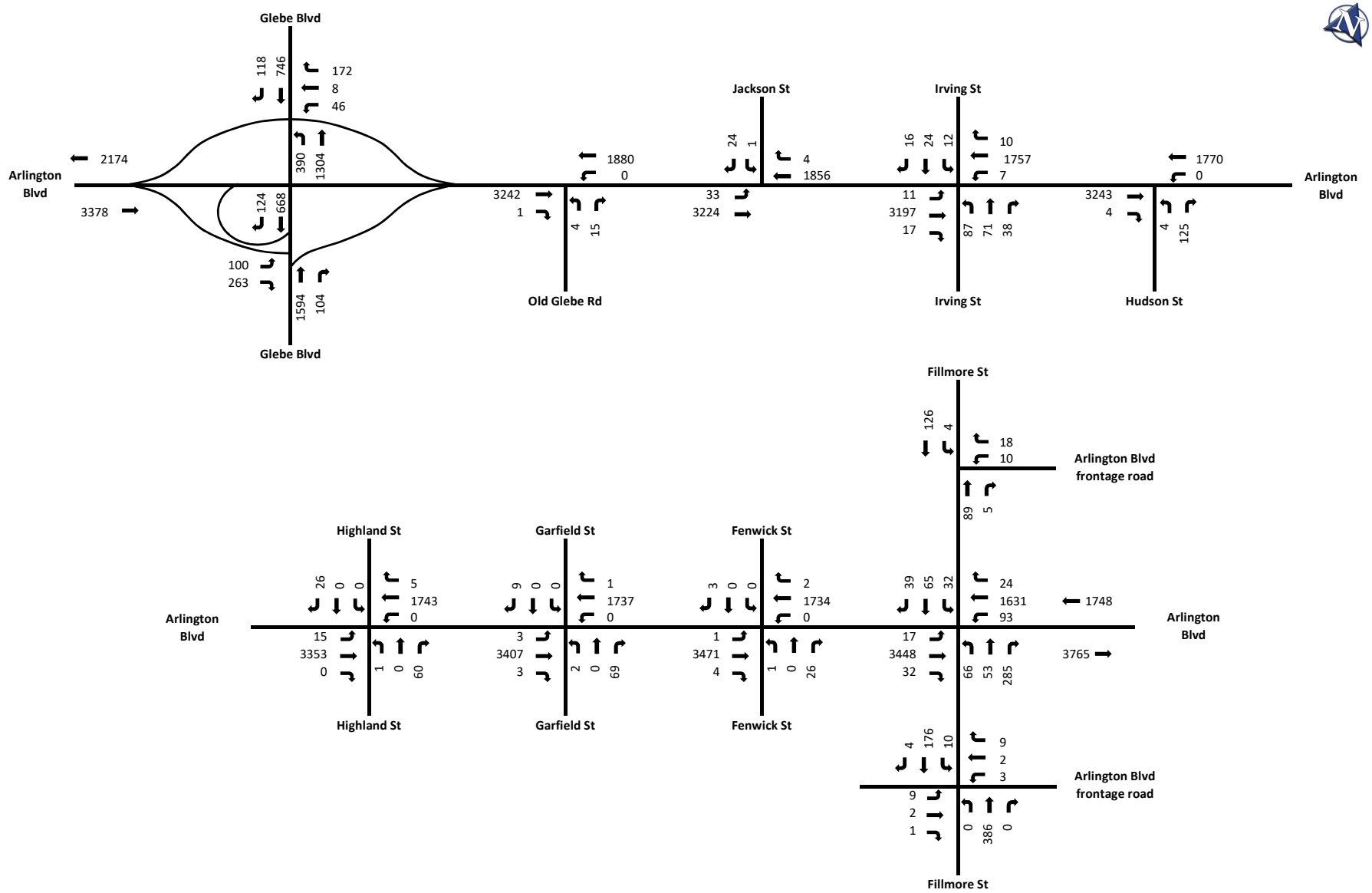

Not To Scale (NTS)

Weekday AM Peak Hour Volume

2019 Existing Traffic Volumes - Balanced

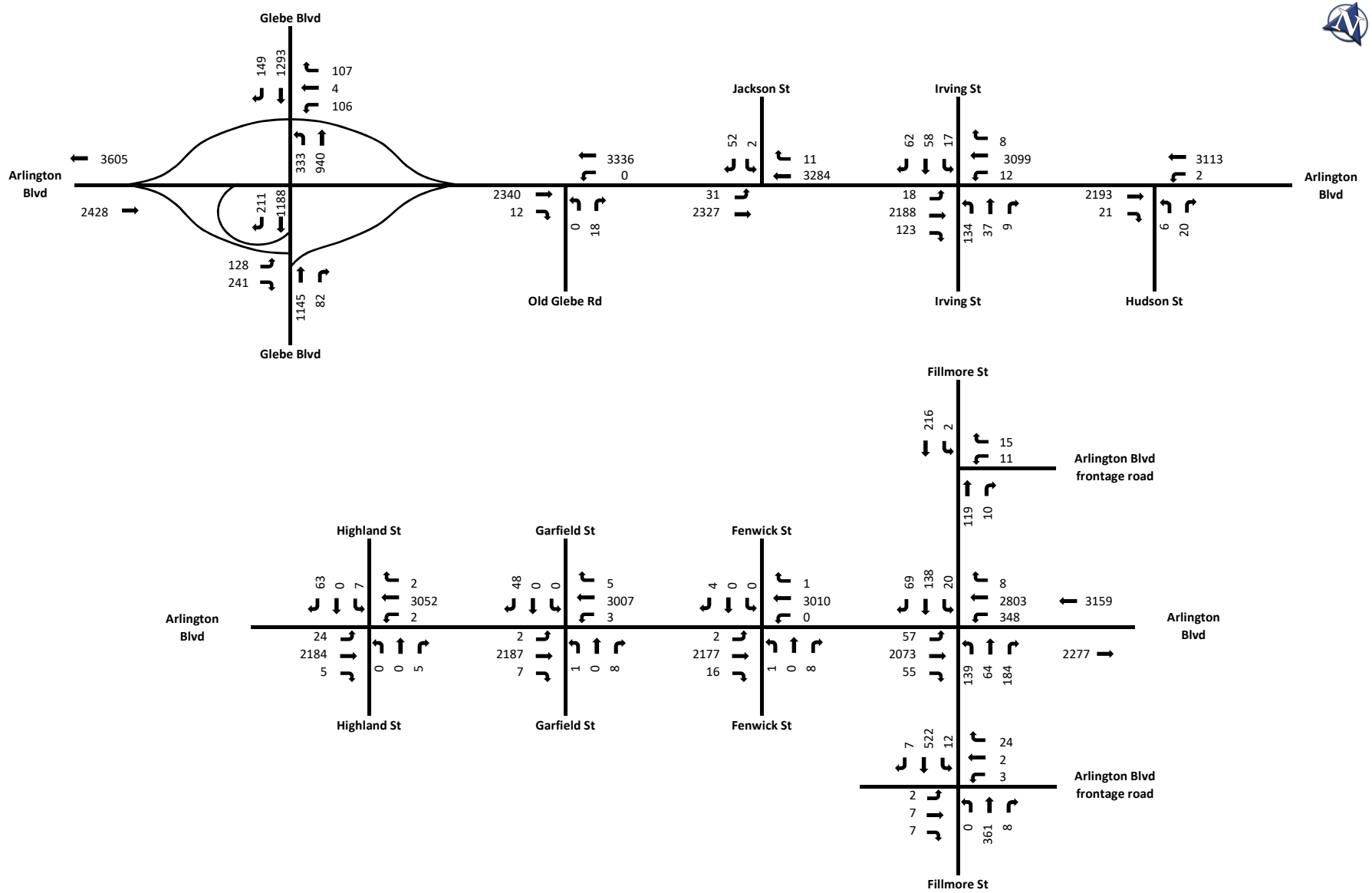

Not To Scale (NTS)

Weekday PM Peak Hour Volume

2019 Existing Traffic Volumes - Balanced

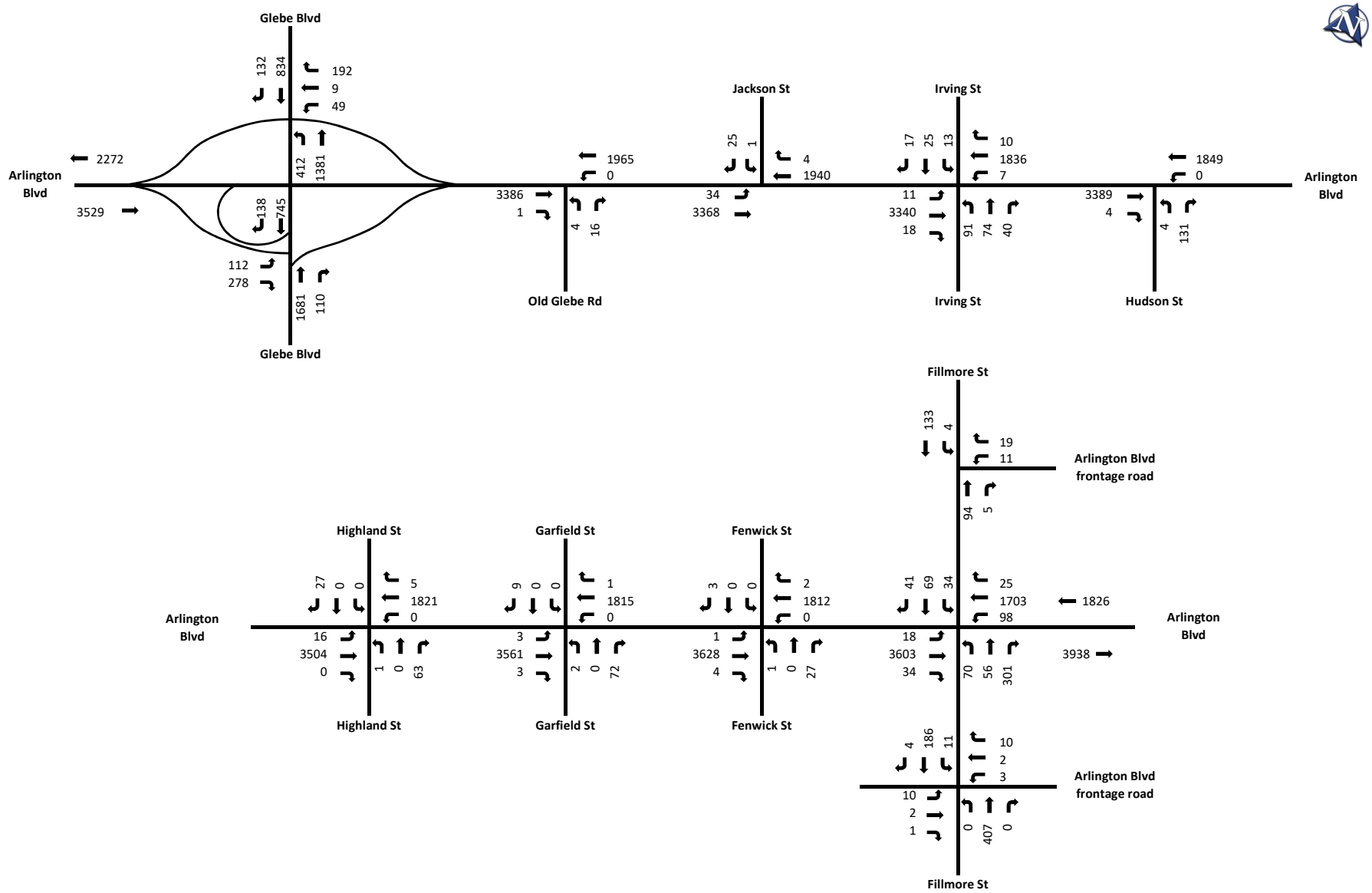

Not To Scale (NTS)

Weekday AM Peak Hour Volume

2030 No Improvements Traffic Volumes - Balanced

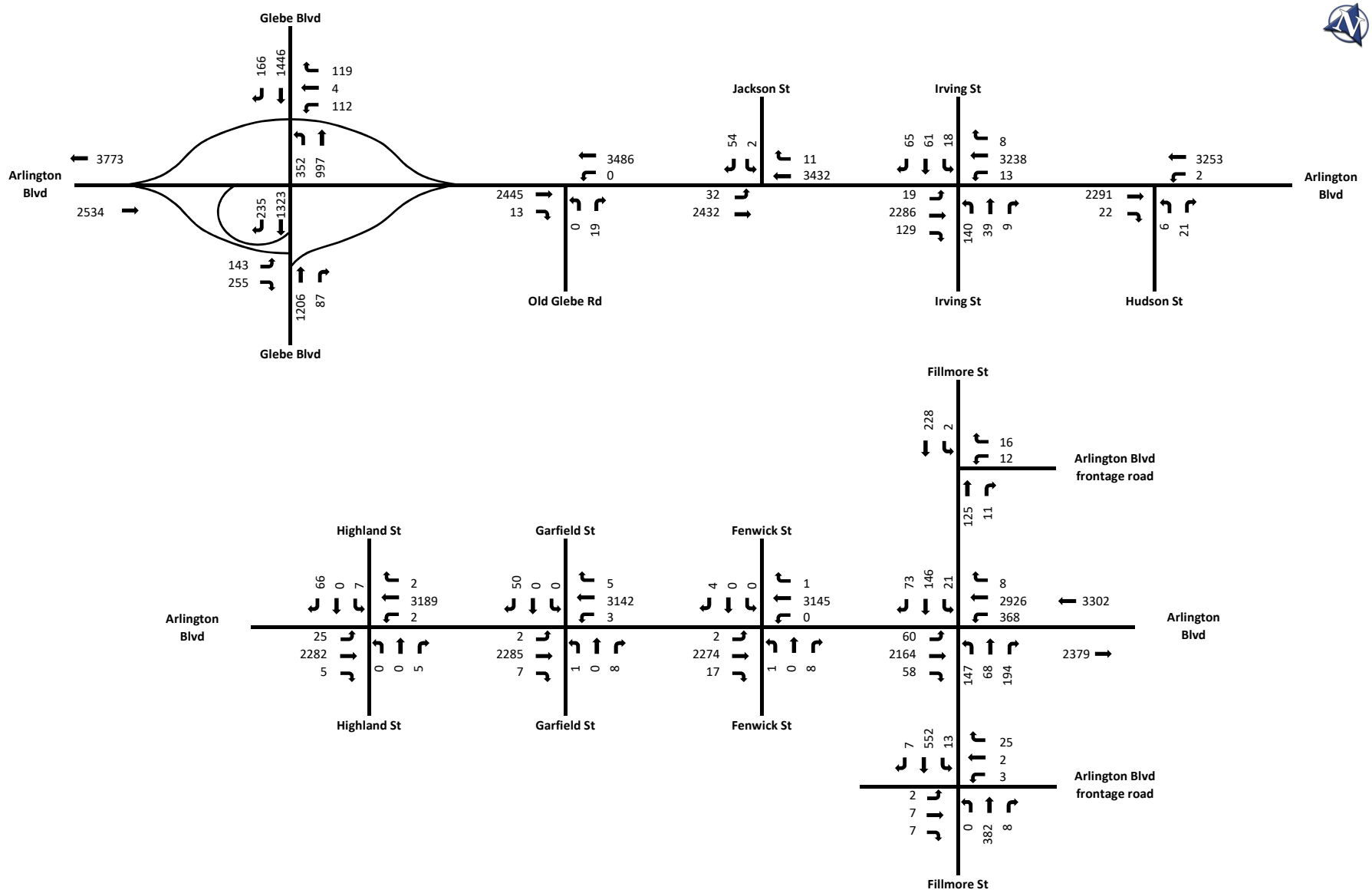

Not To Scale (NTS)

Weekday PM Peak Hour Volume

2030 No Improvements Traffic Volumes - Balanced

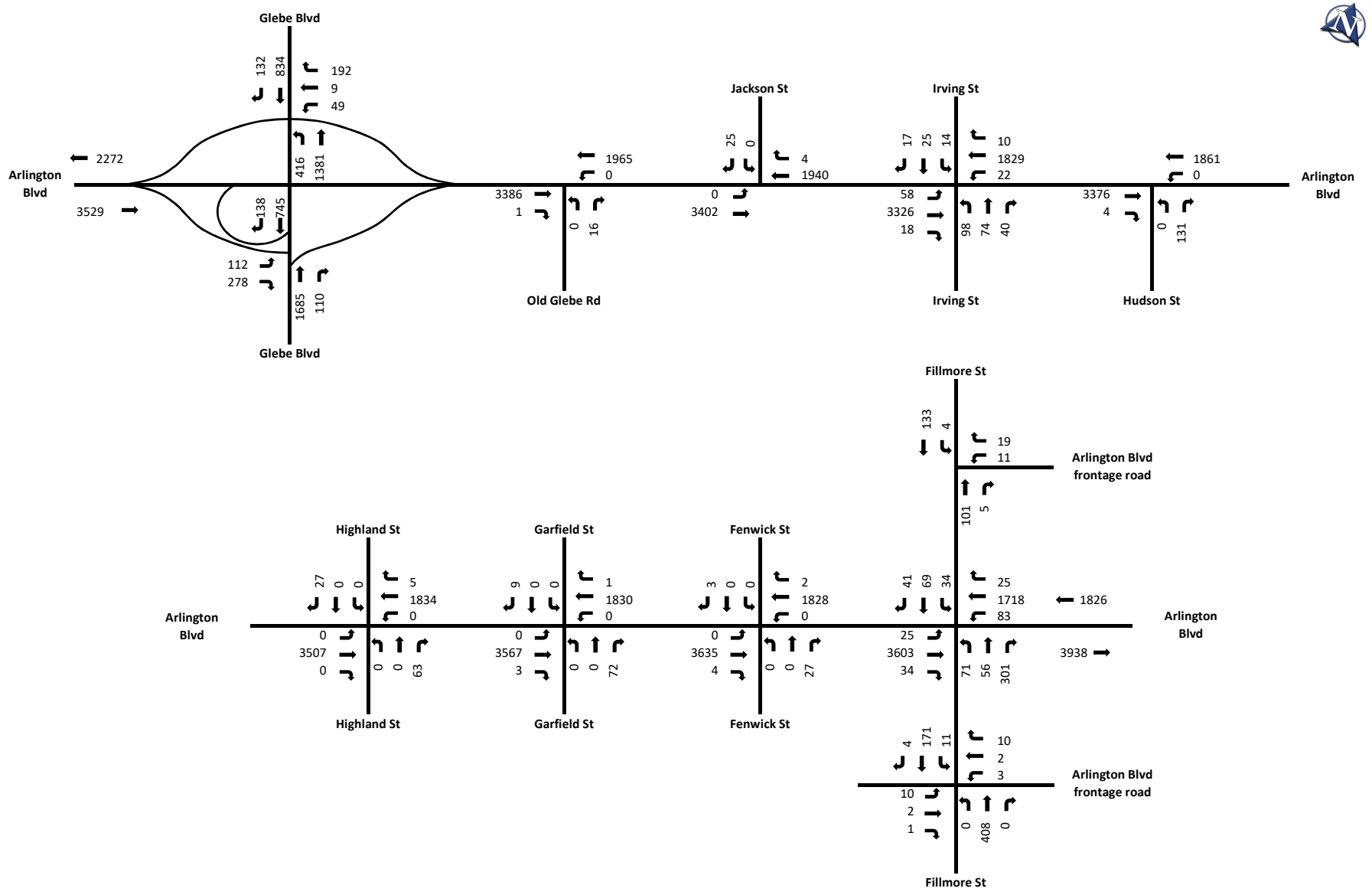

Not To Scale (NTS)

Weekday AM Peak Hour Volume

2030 Build Alternative 1a Traffic Volumes - Balanced

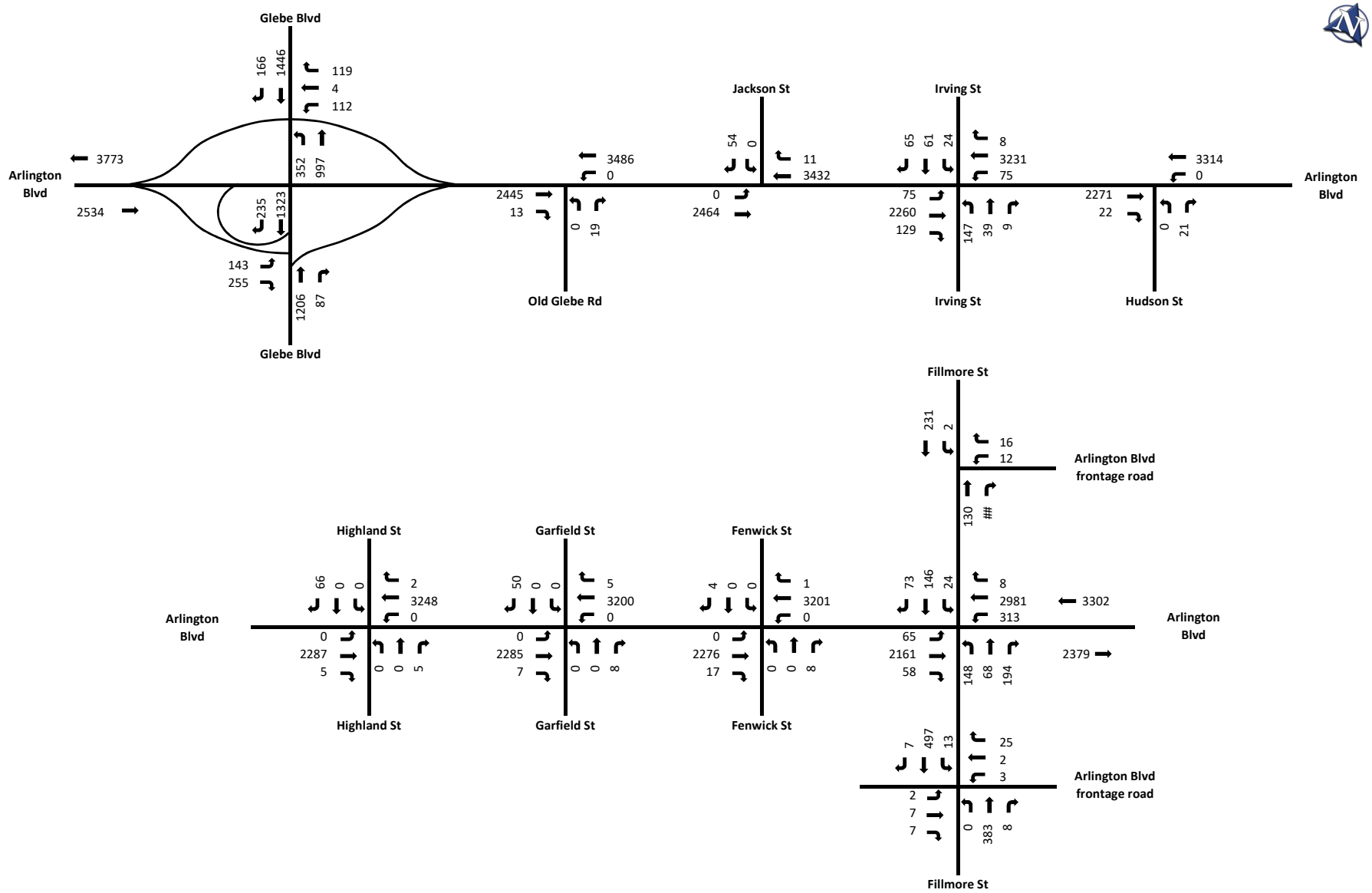

Not To Scale (NTS)

Weekday PM Peak Hour Volume

2030 Build Alternative 1a Traffic Volumes - Balanced

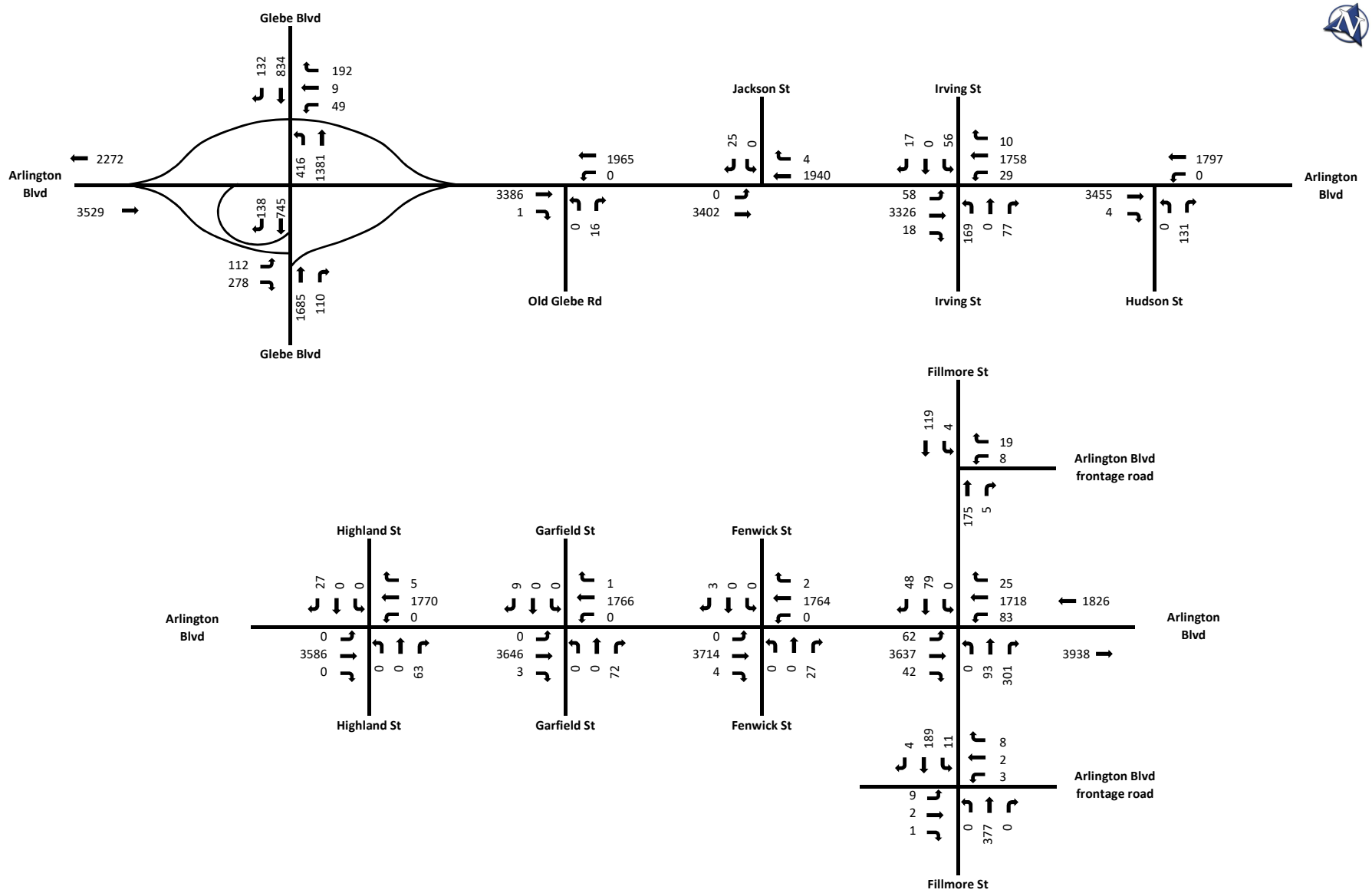

Not To Scale (NTS)

Weekday AM Peak Hour Volume

2030 Build Alternative 1b Traffic Volumes - Balanced

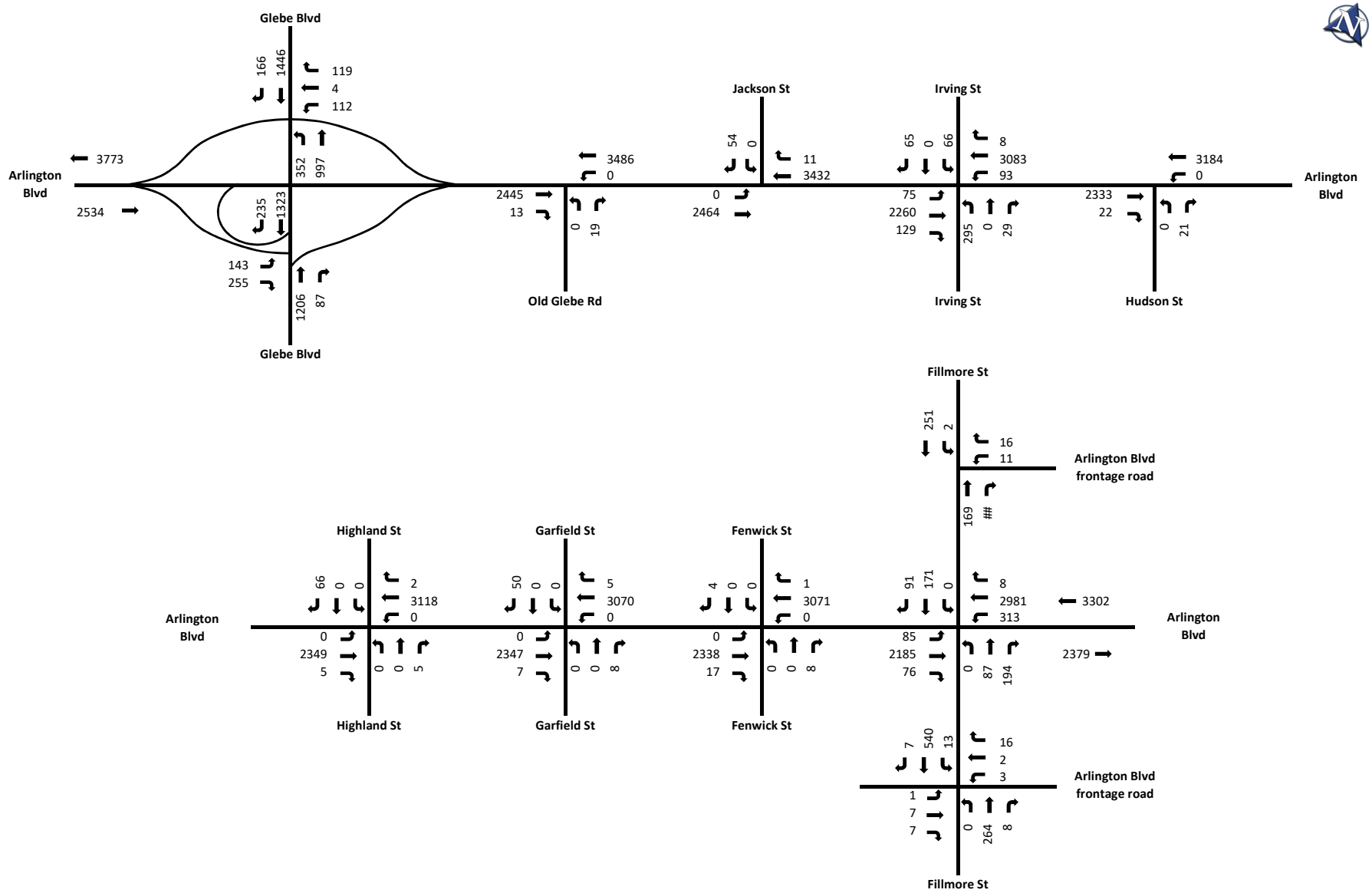

Not To Scale (NTS)

Weekday PM Peak Hour Volume

2030 Build Alternative 1b Traffic Volumes - Balanced

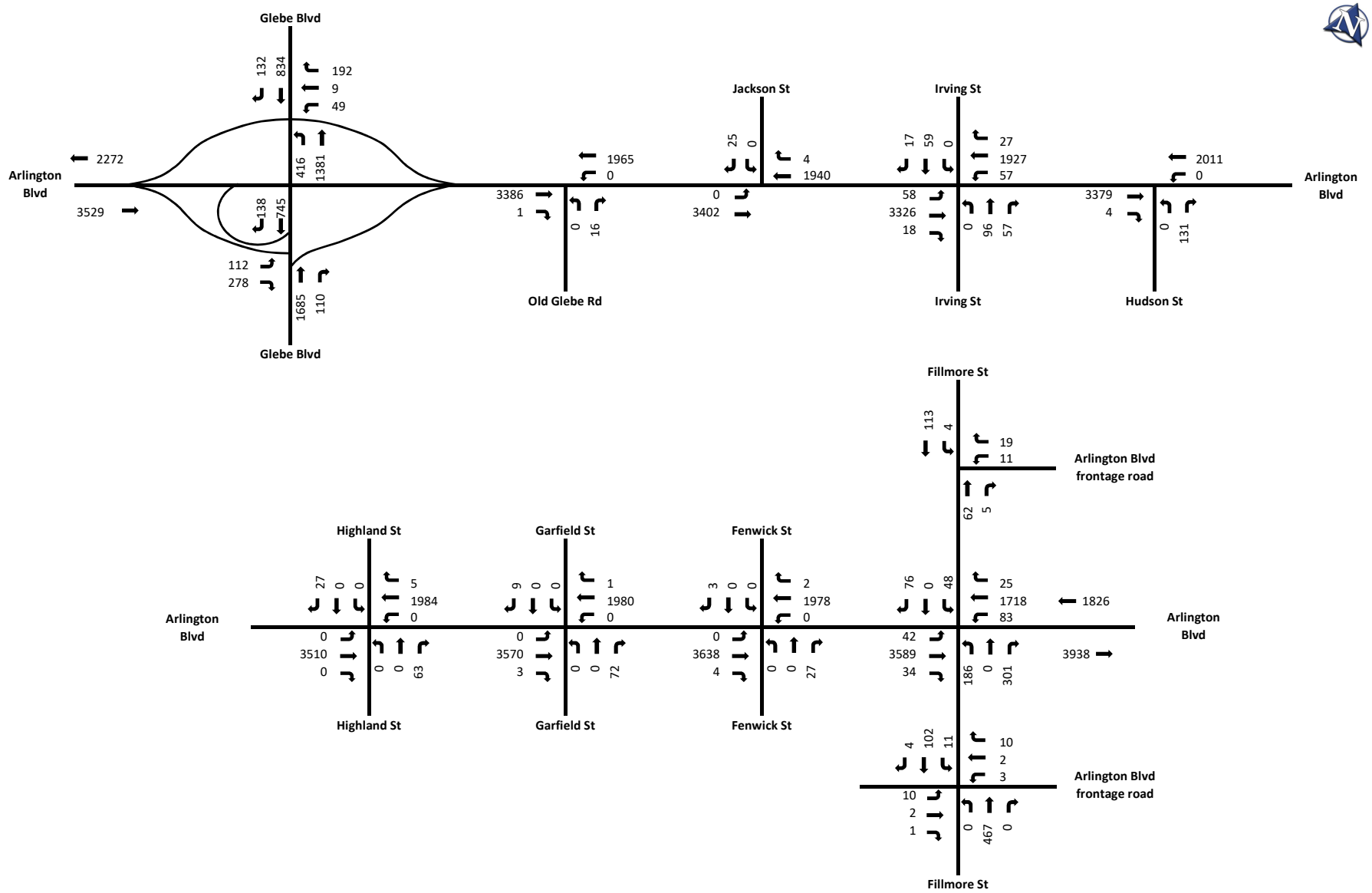

Not To Scale (NTS)

Weekday AM Peak Hour Volume

2030 Build Alternative 1c Traffic Volumes - Balanced

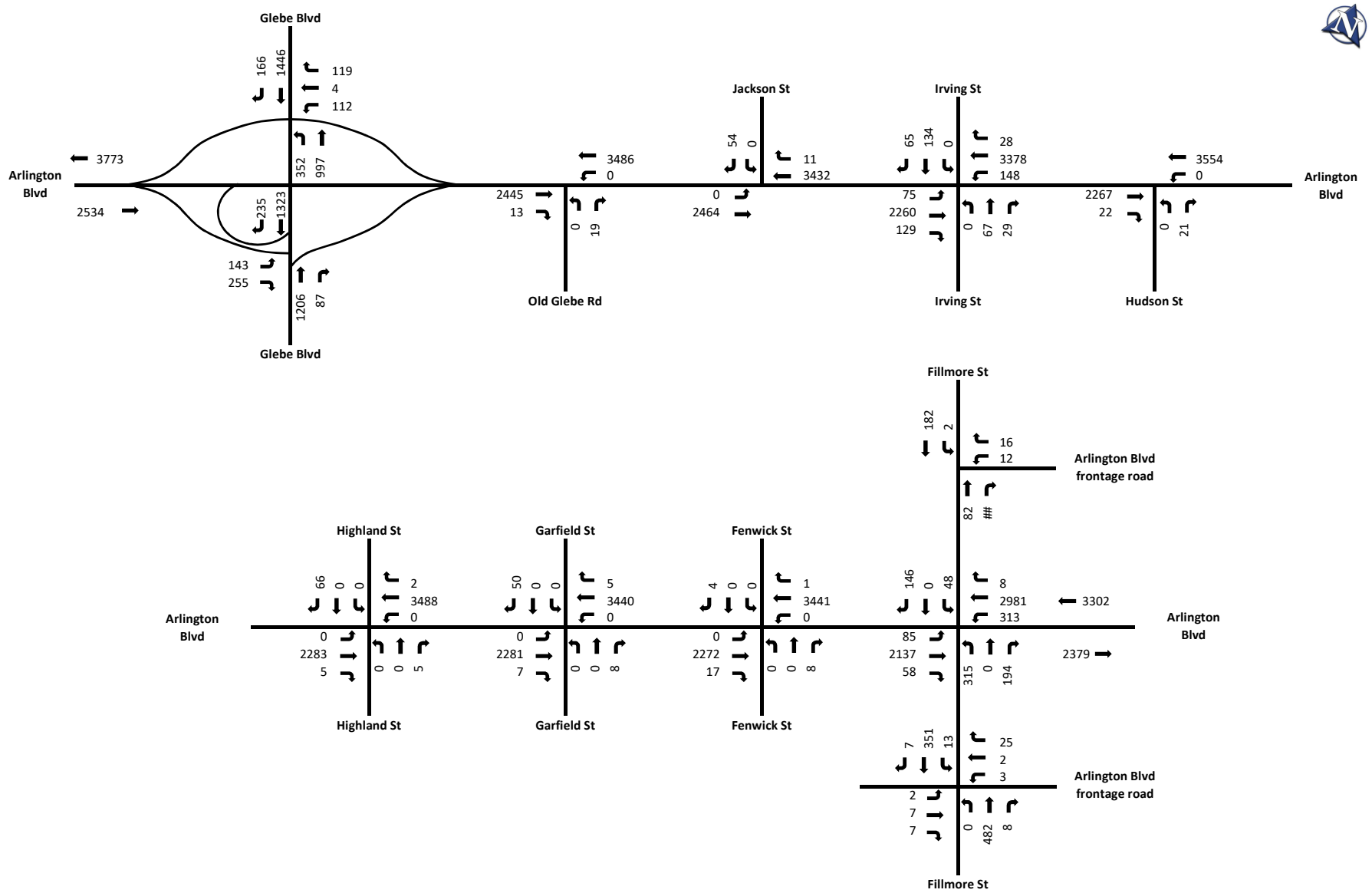

Not To Scale (NTS)

Weekday PM Peak Hour Volume

2030 Build Alternative 1c Traffic Volumes - Balanced

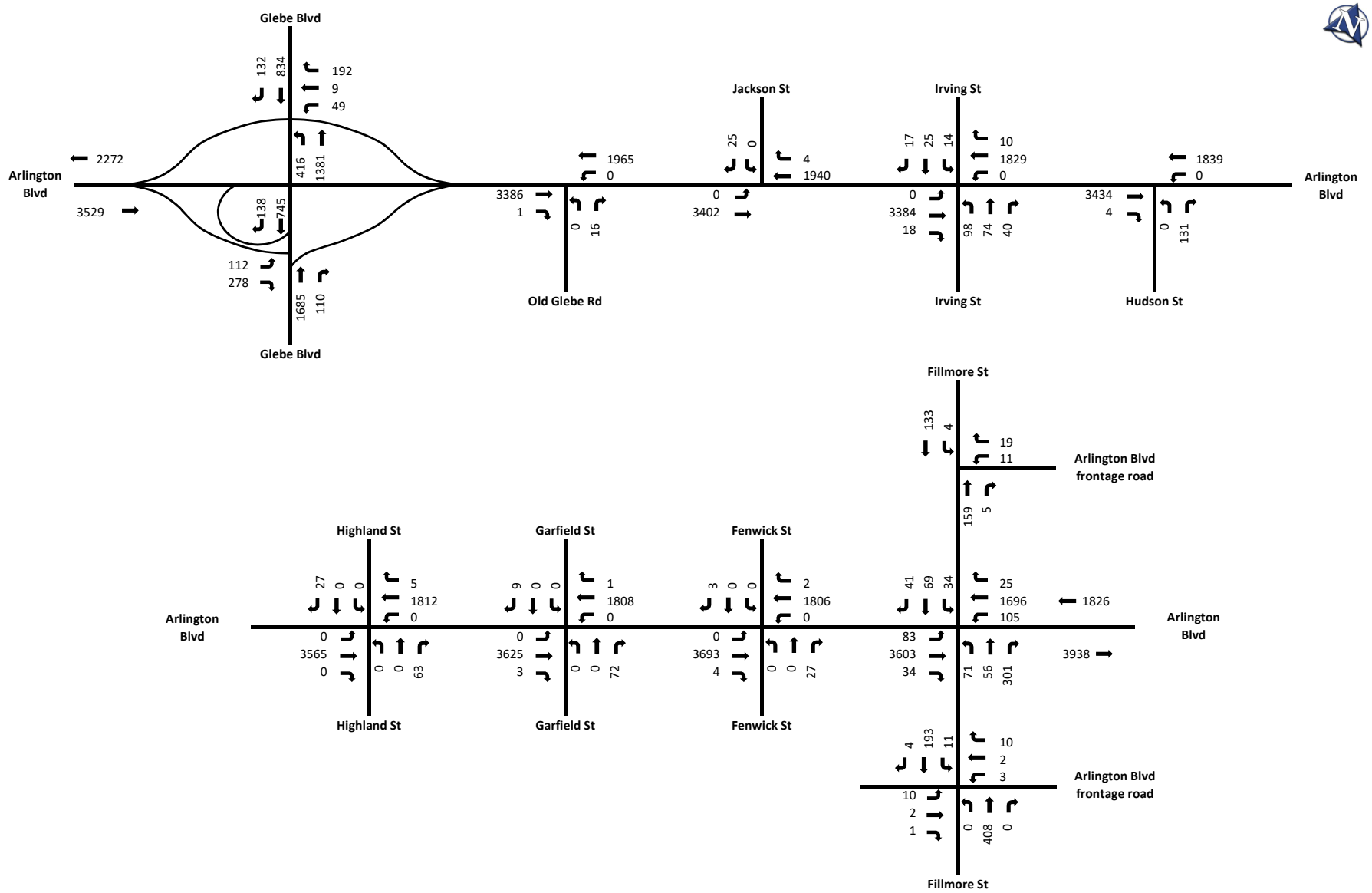

Not To Scale (NTS)

Weekday AM Peak Hour Volume

2030 Build Alternatives 2 and 3 Traffic Volumes - Balanced

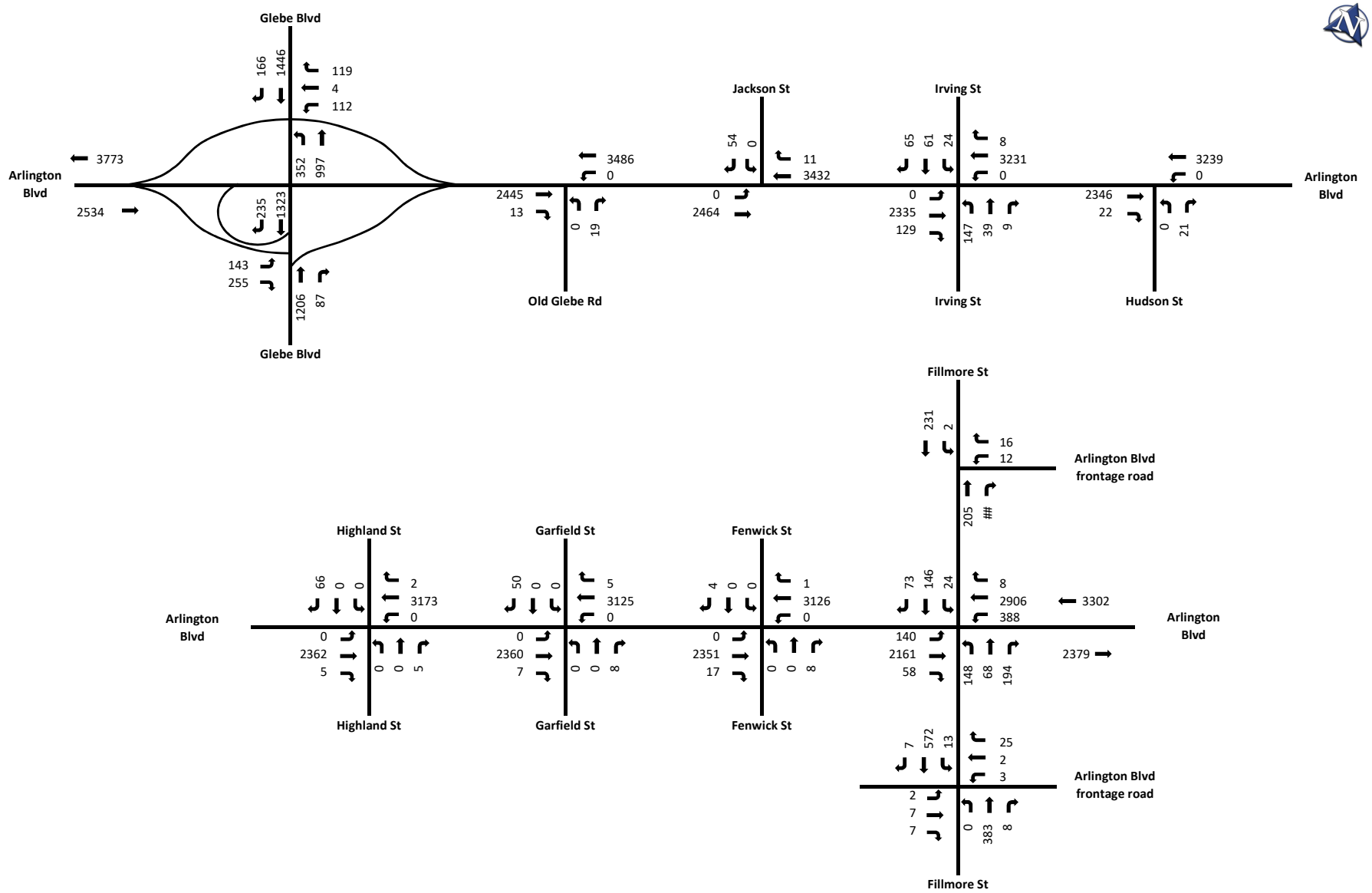

Not To Scale (NTS)

Weekday PM Peak Hour Volume

2030 Build Alternatives 2 and 3 Traffic Volumes - Balanced