Appendix A – Framework Document

STARS Program – Framework Document

Arlington Boulevard (US Route 50) Corridor Improvement Study

1. STAKEHOLDER ACCEPTANCE

The undersigned parties from VDOT and Arlington County concur with the methods and assumptions for the Arlington Boulevard (US Route 50) Corridor Improvement Study as presented in this document.

VDOT (District PM):	**VDOT (TMPD):**	**Arlington County:**
Signature	Signature	Signature for Dennis Leach
Project Manager Title	Asst. Planning Dir. Title	Director of Transportation Title
09/4/2019 Date	9/12/19 Date	9/10/19 Date

(1) Signing of this document does not constitute approval of the Arlington Boulevard (US Route 50) Corridor Improvement Study.

(2) All members will use this document as a guide and reference as the study progresses through the various stages of project development. If there are any agreed upon changes to the assumptions in this document, a revised document will be prepared and assigned by the parties who originally signed it.

2. Introduction & Study Purpose

Arlington Boulevard (US Route 50) from Route 120 (Glebe Road) to Route 6622 (Fillmore Street) has identified safety issues and experiences severe congestion during peak periods. The purpose of this project is to study the operational and safety conditions and propose improvements that can be incorporated into the Virginia Department of Transportation's Six-Year Improvement Plan (SYIP). This study will propose alternatives and technical solutions to mitigate the safety issues and to improve traffic operations and alleviate congestion. This document explains the scope of work and relevant assumptions for the traffic operations and safety analysis. The assumptions identified in this framework document are compliant with VDOT's *Traffic Operations and Safety Analysis Manual (TOSAM).*

The project is anticipated to be completed by March 2020.

3. Study Area and Data Collection Plan

As shown in **Figure 1**, the study area consists of Route 50 from Route 120 (Glebe Road) to the west and Route 6622 (Fillmore Street) to the east (approximately 0.6 miles) and includes the two signalized ramp intersections along Glebe Road. The land uses surrounding Arlington Boulevard are primarily residential. Thomas Jefferson Middle School and the Thomas Jefferson Community Center and Park are located in the southwest corner of the study area and the Columbia Gardens Cemetery is located in the northwest corner of the study area. Etz Hayim Congregation is located on the southwest corner of the Route 50 and Fenwick Street intersection. A new elementary school (Alice West Fleet Elementary School) is currently under construction adjacent to Thomas Jefferson Middle School and will open this school year. Several churches are located within the study area along North Jackson Street, North Irving Street, North Highland Street, and South Fenwick Street. Long Branch Elementary School is located to the east of the study area, along the east side of Fillmore Street. The Route 27 (Washington Boulevard) interchange is located just east of the study area.

The following intersections are included within the study area:

1. N Glebe Road and Route 50 WB ramp (Signalized)
2. N Glebe Road and Route 50 EB ramp (Signalized)
3. Route 50 at Old Glebe Road (Unsignalized)
4. Route 50 and N Jackson Street (Unsignalized)
5. Route 50 and Irving Street (Signalized)
6. Route 50 and Hudson Street (Unsignalized)
7. Route 50 and Highland Street (Unsignalized)
8. Route 50 and Garfield Street (Unsignalized)
9. Route 50 and Fenwick Street (Unsignalized)
10. Route 50 and Fillmore Street (Signalized)
11. N Fillmore Street and Route 50 Frontage Road (Unsignalized)
12. N Fillmore Street and Route 50 Frontage Road (Unsignalized)

The following ramp junctions along Route 50 are to be included as part of this study:

1. Route 50 Eastbound On-Ramp from Glebe Road
2. Route 50 Westbound Off-Ramp to Glebe Road

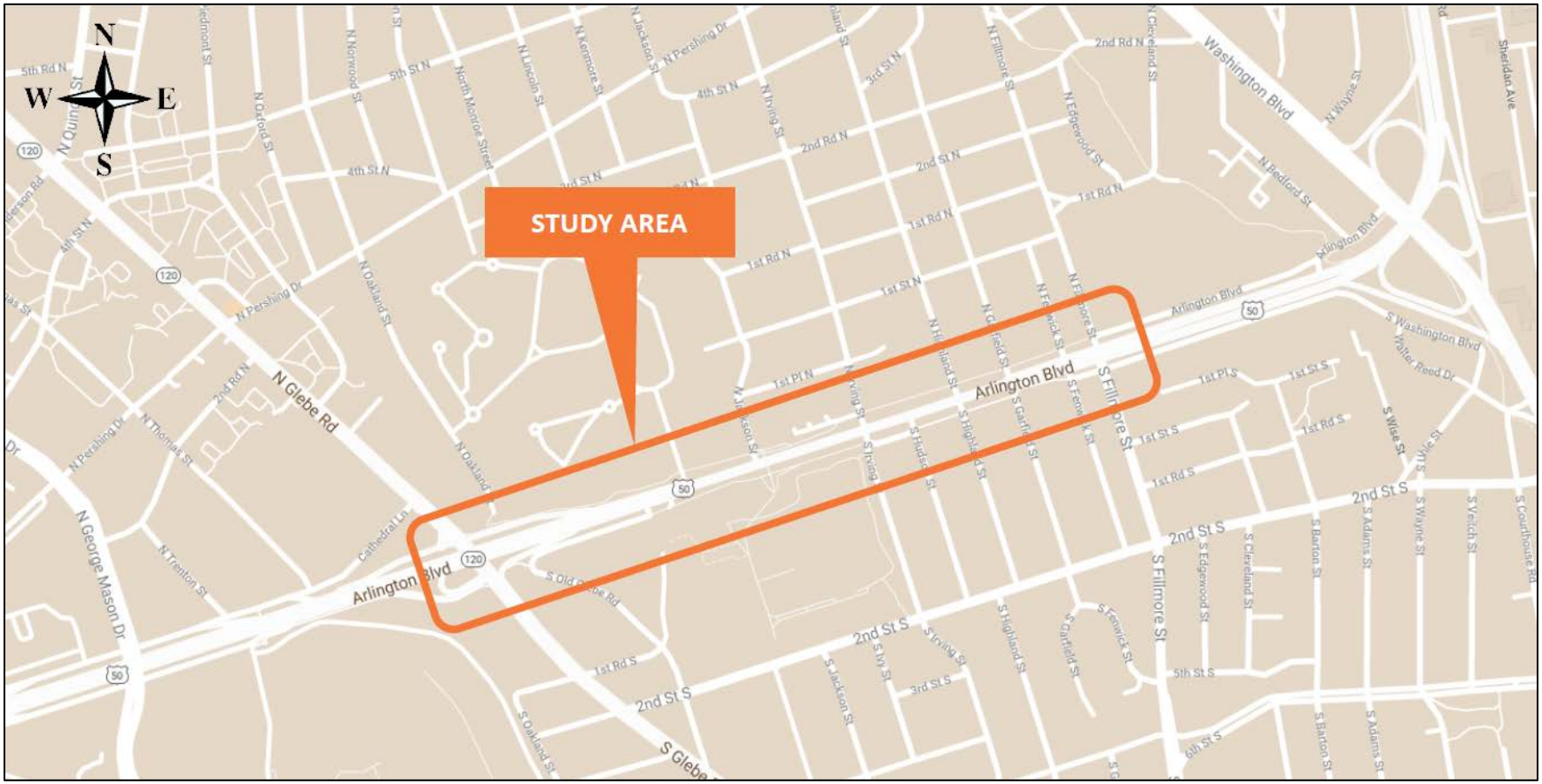

Figure 1: Project Study Area

In order to identify crash data trends including locations, crash patterns, severity, and other contributing factors, the study team will obtain crash data for a five-year study period from January 1, 2014 through December 31, 2018 using VDOT's Tableau Tool.

4. Existing Studies Which Should Be Referenced

A sidewalk and signal upgrade project was completed at the intersection of Route 50 and Irving Street to improve access and safety for pedestrians, transit users, bicyclists and vehicles (UPC 96751). The project was funded using HSIP funds and was completed in fall 2018. There are no other ongoing or recently completed efforts that are relevant in the US Route 50 (Arlington Boulevard) Corridor Improvement Study.

In addition, Arlington County recently completed an upgrade to the traffic signal at Route 50 and Fillmore Street

5. Analysis Years and Time Periods

Operation analyses will be conducted for the existing year 2019 and horizon year 2030 as the study will identify immediate or intermediate term improvements. Weekday AM and PM peak periods will be evaluated for each intersection. Uniform network-wide peak hours will be established from the traffic counts data based on data collection of the following elements:

- Weekday 6-hour (6:30am to 9:30am and 3:30pm to 6:30pm) turning movement counts at the signalized and unsignalized intersections noted under the **Study Area and Data Collection Plan** section of this framework document. Pedestrians, bicyclists, and heavy vehicles will be counted separately. At the unsignalized intersections, only turning movement volumes will be collected.
- Weekday 48-hour video ADT counts, including vehicle classification at the following two Route 50 locations:
    - Route 50, between Columbia Gardens Cemetery and Jackson Street
    - Route 50, between Highland Street and Garfield Street
- Weekday corridor travel time runs during the AM and PM peak hours while school is in session (10 runs per direction during each peak hour)
- Weekday intersection queue lengths at the signalized and unsignalized intersections noted under the **Study Area and Data Collection Plan** for five consecutive cycle lengths at signalized intersections and for a 15-minute period on stop-controlled approaches to unsignalized intersections during the AM and PM peak hours.

6. Traffic Analysis Tools

The traffic operations and simulation analysis will be performed using VISSIM (version 8). Synchro (version 10.3) will be used to screen the initial improvement options and develop signal timings for future 2030 conditions. Arlington County will provide existing signal timing data for traffic signals within the study area. Inputs and analysis methodologies will be consistent with VDOT's *Traffic Operations and Safety Analysis Manual (TOSAM)*. Calibration parameters are provided in **Section 7** and Measures of Effectiveness (MOEs) are detailed in **Section 8** of this document.

The following approach and assumptions will be used to analyze traffic operations using VISSIM.

- Traffic volume inputs will be developed in 15-minute intervals in conjunction with the balanced hourly traffic counts along the corridor.
- Vehicle routes will be consistent through the entire simulation period and will be based on the balanced peak hour traffic volumes. Static vehicle routes will be coded into the VISSIM network approaching each intersection or decision point (e.g., off-ramps at interchanges).
- Vehicle compositions will be consistent through the entire simulation period and unique for each entry link into the VISSIM network. These compositions will be developed based on calculated truck percentages from the collected traffic counts.
- Public transportation and pedestrians will not be coded into the VISSIM network or analyzed. Pedestrian timings will be included as part of the development of timings in Synchro where appropriate.

7. Calibration Assumptions and Targets

The VISSIM models will be calibrated using guidance and direction provided in the TOSAM. Traffic volumes, travel times, and maximum queue lengths at select intersections will be used as calibration measures on Route 50. Calibration thresholds for each measure are summarized in **Table 1**.

Traffic Volume: Simulated throughput will be calibrated using the network AM and PM peak hours. Intersection traffic volumes will be calibrated by turning movement volumes at critical intersections, which are identified as the signalized intersections within the study area. Approach traffic volumes will be calibrated at non-critical intersections. The following critical intersections will be used for calibration purposes:

1. N Glebe Road and Route 50 WB ramp (Signalized)
2. N Glebe Road and Route 50 EB ramp (Signalized)
3. Route 50 and Irving Street (Signalized)
4. Route 50 and Fillmore Street (Signalized)

Travel Time: Simulated travel time will be calibrated using the segment travel times during the AM and PM peak hours. Route 50 travel time for segments between the critical intersections and an aggregation of these segments will be calibrated using field travel time data.

Queue Length: Simulated maximum queue length will be used to guide the calibration process using maximum queue length results during the AM and PM peak hours but will not be considered a calibration measure. Due to the variability in queue length, the effort will be focused at critical locations where recurring congestion causes extensive queueing. Due to extensive queues that form along eastbound and westbound Route 50, mainline through queue calibration will focus on whether queues extend through upstream intersections, consistent with field observations.

Table 1: VISSIM Calibration Assumptions and Targets

Simulated Measure	Calibration Threshold
Simulated Traffic Volume (vehicles per hour) At intersections, difference targets must be met for a minimum of 85% of movements at critical intersections and a minimum of 85% of approaches for other intersections	Within ±20% for <100 vph Within ±15% for ≥100 vph to <300 vph Within ±10% for ≥300 vph to <1,000 vph Within ±5% for ≥1,000 vph
Simulated Travel Time (seconds) Travel time difference targets must be met for a minimum of 85% of segments along Route 50 between the critical intersections and for the entire Route 50 study corridor	Within ±30% for average observed travel times

The VISSIM model calibration procedures and results will be summarized in a technical memorandum that will be included in the Appendix of the report. This technical memorandum will document modifications that were made to the VISSIM models to meet the calibration targets. If any targets are not satisfied and the VISSIM models can still be considered reasonably calibrated, written justification will be provided and a mutually-agreeable resolution will be determined.

8. Measures of Effectiveness (MOEs)

MOEs will be obtained from VISSIM to be consistent with the guidance in the TOSAM. Study area intersections will be evaluated using vehicle throughput (vph), delay (sec/veh), and maximum queue length (feet). The Route 50 study corridor will be evaluated using travel times (minutes). LOS will not be provided as an MOE; however, metrics such as “severe congestion” and “light traffic conditions” corresponding to LOS will be used to depict congestion levels.

9. Safety Analysis Methodology

A crash analysis will be conducted for the Route 50 study corridor using the latest five complete years (2014 – 2018) of available crash data in VDOT’s crash database. Individual police reports (FR-300s) will not be reviewed for this analysis. Relevant crash data will be reviewed, analyzed, and summarized based on crash year, location, weather conditions, time of day, type and severity, possible cause of crashes, or other factors that will help identify crash patterns. Following the historical crash data review, the analysis team will propose safety recommendations that may include signing and pavement marking improvements, traffic and pedestrian signal improvements, modifications to pedestrian, bike and transit facilities, improvements to sight distance, and access management. The study team will utilize crash modification factors (CMFs) and conflict point analyses to determine the safety benefits of each Build alternative.

10. Traffic Forecasting Methodology

Existing count data, VDOT historic traffic count data, VDOT’s Statewide Planning System (SPS) traffic forecasts, and the latest MWCOG model will be reviewed to develop a projected annual average growth rate (AAGR) which will be applied to existing counts to generate future year 2030 traffic forecasts. No

validation or calibration of the MWCOG model will be performed. The study team will develop average daily traffic (ADT) and AM and PM peak hour volume forecasts. The forecasted traffic volumes will be submitted to VDOT for review prior to any analysis being performed.

11. Number and General Types of Potential Concepts

After analyzing and reviewing the future year No Build traffic analysis results and identifying any safety and operational deficiencies, the study team will develop improvement alternatives for the study area. Improvements to be considered include, but are not limited to, access management, turn lane improvements, signal optimization/coordination, intersection improvements, and pedestrian, bike, and transit improvements. The analysis team will utilize VDOT Junction Screening Tool (VJuST) to understand whether innovative intersections are appropriate at spot intersections along the study corridor. To achieve a more thorough screening, *Synchro 10* may be used in addition to VJuST.

The initial concepts will be discussed with the study team to determine the desired alternatives for further analysis in *Synchro 10*. It is assumed that a maximum of two alternatives per intersection or roadway link will be evaluated in detail. Concept sketches for these two alternatives per location will be developed using aerial photography and available GIS data base mapping. As the corridor is saturated, VISSIM will be used to conduct a more detailed analysis of the study corridor once a preferred alternative is selected.

12. Cost Estimating Approach

The study team will prepare planning-level cost estimates for the preferred alternatives. Cost estimates will be separated by intersection/link to allow for individual locations to move forward as project applications (or for several locations to be combined into a single future project application). The Project Cost Estimating System (PCES) will be used to facilitate the process. Additionally, a quantity take-off estimate will be developed concurrently. The team will coordinate with VDOT NOVA District to gather input about right-of-way and utility relocation costs and will adjust the cost estimates accordingly. The study team will submit the preliminary cost estimates to VDOT for review and will revise them based on any feedback received from VDOT.

13. Public Outreach Plan

A minimum of two (2) public outreach meetings will be held to ensure that adequate public feedback is received regarding the needs to be addressed and the public has the opportunity to review and comment on the alternatives proposed to address those needs. The first public meeting will be conducted during the concept development process to present the findings of the existing conditions analysis and present the purpose and need for the project. The second public meeting will be conducted to present the findings of the future Build analysis and offer the public the opportunity to comment on the alternatives evaluated. Additional public meetings will be held, if necessary, to further engage the public in the selection of a preferred alternative. The study team will prepare the presentation materials for the public meetings. Staff from VDOT, Arlington County and the study team will provide support at each of the public outreach meetings.

The public outreach for each public meeting will include a web survey in order to gain wider public input. The web surveys will be accompanied by the display boards and presentation materials from the public outreach meetings to garner the best possible input from the web portal. Virtual public involvement will be performed using MetroQuest, in coordination with VDOT.

14. Roles of Parties/Stakeholder Meetings

The study team will conduct the Arlington Boulevard Corridor Improvement Study that will identify existing and forecasted operational and safety deficiencies and develop the study materials. VDOT will be the primary project manager for the study. Arlington County is a key partner that will provide significant input into the study. Arlington County will be responsible for pursuing funding for implementing the preferred alternatives.

A Stakeholder Working Group (SWG) comprised of VDOT, Arlington County and the study team will meet approximately 4 to 5 times during the course of the project. Representatives from the following agencies will be included on the SWG:

- VDOT Transportation and Mobility Planning Division
- VDOT NOVA Transportation and Land Use
- VDOT Northern Region Operations
- VDOT NOVA Traffic Engineering
- VDOT NOVA Preliminary Engineering
- VDOT NOVA Transportation Planning
- Arlington County Department of Environmental Services – Traffic Engineering and Operations
- Arlington County Department of Environmental Services – Transportation Planning
- Study team (WRA and RK&K)

Appendix B – Traffic Data

Peggy Malone and Associates

CLASSIFICATION SUMMARY
Wed 5/29/2019

Station #: ADT A
Site ID: ADT A
Location: US 50, btw Jackson St and US 50
Direction: WEST
Lane: 1

File: D0529001.PRN
Job #: 38.87209, -77.09559
GPS: Car/Medium/Heavy

TIME	1	2	3	Total
00:15	103	2	0	105
00:30	72	0	0	72
00:45	50	0	0	50
01:00	46	0	0	46
Hour Total	271	2	0	273
01:15	43	0	0	43
01:30	31	0	0	31
01:45	27	0	0	27
02:00	22	2	0	24
Hour Total	123	2	0	125
02:15	26	0	0	26
02:30	35	0	0	35
02:45	25	0	0	25
03:00	21	0	0	21
Hour Total	107	0	0	107
03:15	18	2	0	20
03:30	19	0	0	19
03:45	16	1	0	17
04:00	16	0	0	16
Hour Total	69	3	0	72
04:15	20	0	0	20
04:30	21	1	1	23
04:45	29	1	0	30
05:00	48	0	0	48
Hour Total	118	2	1	121
05:15	57	1	0	58
05:30	101	3	0	104
05:45	137	4	0	141
06:00	156	3	1	160
Hour Total	451	11	1	463
06:15	189	4	0	193
06:30	238	2	0	240
06:45	305	3	1	309
07:00	328	5	0	333
Hour Total	1060	14	1	1075
07:15	347	11	0	358
07:30	491	14	0	505
07:45	451	15	0	466
08:00	531	16	0	547
Hour Total	1820	56	0	1876
08:15	513	16	0	529
08:30	435	5	0	440
08:45	478	6	1	485
09:00	418	13	0	431
Hour Total	1844	40	1	1885

Peggy Malone and Associates

CLASSIFICATION SUMMARY
Wed 5/29/2019

Station #: ADT A
Site ID: ADT A
Location: US 50, btw Jackson St and US 50
Direction: WEST
Lane: 1

File: D0529001.PRN
Job #: 38.87209, -77.09559
GPS: Car/Medium/Heavy

TIME	1	2	3	Total
09:15	350	11	0	361
09:30	407	14	0	421
09:45	333	9	0	342
10:00	372	14	0	386
Hour Total	1462	48	0	1510
10:15	291	10	0	301
10:30	303	8	2	313
10:45	290	5	1	296
11:00	342	14	3	359
Hour Total	1226	37	6	1269
11:15	309	8	1	318
11:30	333	7	0	340
11:45	326	7	2	335
12:00	336	9	1	346
Hour Total	1304	31	4	1339
12:15	401	6	1	408
12:30	400	4	0	404
12:45	374	6	1	381
13:00	365	2	0	367
Hour Total	1540	18	2	1560
13:15	407	7	0	414
13:30	422	5	0	427
13:45	409	8	0	417
14:00	429	13	0	442
Hour Total	1667	33	0	1700
14:15	399	11	2	412
14:30	433	8	1	442
14:45	551	10	0	561
15:00	589	10	0	599
Hour Total	1972	39	3	2014
15:15	581	8	0	589
15:30	658	11	0	669
15:45	767	14	1	782
16:00	774	12	0	786
Hour Total	2780	45	1	2826
16:15	742	17	1	760
16:30	779	12	0	791
16:45	767	4	0	771
17:00	782	17	0	799
Hour Total	3070	50	1	3121
17:15	871	4	0	875
17:30	783	6	0	789
17:45	805	5	0	810
18:00	775	8	0	783
Hour Total	3234	23	0	3257

CLASSIFICATION SUMMARY
Wed 5/29/2019

Station #: ADT A
Site ID: ADT A
Location: US 50, btw Jackson St and US 50
Direction: WEST
Lane: 1

File: D0529001.PRN
Job #: 38.87209, -77.09559
GPS: Car/Medium/Heavy

TIME	1	2	3	Total
18:15	802	7	0	809
18:30	725	4	0	729
18:45	769	7	0	776
19:00	599	5	0	604
Hour Total	2895	23	0	2918
19:15	552	7	0	559
19:30	479	2	0	481
19:45	436	2	0	438
20:00	438	1	0	439
Hour Total	1905	12	0	1917
20:15	400	1	0	401
20:30	350	1	0	351
20:45	331	2	0	333
21:00	310	0	0	310
Hour Total	1391	4	0	1395
21:15	299	2	0	301
21:30	316	1	0	317
21:45	282	1	0	283
22:00	289	2	0	291
Hour Total	1186	6	0	1192
22:15	321	2	0	323
22:30	254	1	0	255
22:45	245	2	0	247
23:00	211	0	0	211
Hour Total	1031	5	0	1036
23:15	196	1	0	197
23:30	148	1	0	149
23:45	145	1	0	146
24:00	110	1	0	111
Hour Total	599	4	0	603
24 HR TOTAL	33125	508	21	33654
PERCENTS	98.4%	1.5%	0.1%	100.0%

Passenger Vehicles 100.0% Trucks & Buses 0.0%

AM Times	07:30	07:30	10:30	07:30
AM Peaks	1986	61	7	2047
PM Times	17:00	15:45	11:30	17:00
PM Peaks	3241	55	4	3273

CLASSIFICATION SUMMARY
Thu 5/30/2019

Station #: ADT A
Site ID: ADT A
Location: US 50, btw Jackson St and US 50
Direction: WEST
Lane: 1

File: D0529001.PRN
Job #: 38.87209, -77.09559
GPS: Car/Medium/Heavy

TIME	1	2	3	Total
00:15	83	1	0	84
00:30	82	0	0	82
00:45	63	0	0	63
01:00	46	0	0	46
Hour Total	274	1	0	275
01:15	41	0	0	41
01:30	50	0	0	50
01:45	45	0	0	45
02:00	36	1	0	37
Hour Total	172	1	0	173
02:15	31	0	0	31
02:30	31	0	0	31
02:45	20	0	0	20
03:00	28	1	0	29
Hour Total	110	1	0	111
03:15	18	0	0	18
03:30	18	0	0	18
03:45	13	0	0	13
04:00	16	0	0	16
Hour Total	65	0	0	65
04:15	16	0	0	16
04:30	34	1	0	35
04:45	32	1	1	34
05:00	53	0	0	53
Hour Total	135	2	1	138
05:15	52	0	1	53
05:30	89	4	0	93
05:45	148	0	0	148
06:00	171	2	1	174
Hour Total	460	6	2	468
06:15	184	7	1	192
06:30	195	5	0	200
06:45	280	8	0	288
07:00	315	3	0	318
Hour Total	974	23	1	998
07:15	379	11	1	391
07:30	434	8	2	444
07:45	430	11	0	441
08:00	495	11	1	507
Hour Total	1738	41	4	1783
08:15	474	14	0	488
08:30	428	10	2	440
08:45	445	6	0	451
09:00	395	9	1	405
Hour Total	1742	39	3	1784

CLASSIFICATION SUMMARY
Thu 5/30/2019

Station #: ADT A
Site ID: ADT A
Location: US 50, btw Jackson St and US 50
Direction: WEST
Lane: 1

File: D0529001.PRN
Job #: 38.87209, -77.09559
GPS: Car/Medium/Heavy

TIME	1	2	3	Total
09:15	368	9	0	377
09:30	347	9	1	357
09:45	303	9	0	312
10:00	375	7	0	382
Hour Total	1393	34	1	1428
10:15	300	10	0	310
10:30	291	11	1	303
10:45	299	19	0	318
11:00	319	11	1	331
Hour Total	1209	51	2	1262
11:15	318	13	1	332
11:30	317	11	0	328
11:45	347	12	0	359
12:00	361	9	1	371
Hour Total	1343	45	2	1390
12:15	378	8	1	387
12:30	397	14	0	411
12:45	400	13	0	413
13:00	402	12	0	414
Hour Total	1577	47	1	1625
13:15	437	6	0	443
13:30	432	11	0	443
13:45	402	9	0	411
14:00	390	13	0	403
Hour Total	1661	39	0	1700
14:15	434	13	0	447
14:30	506	9	0	515
14:45	507	11	0	518
15:00	545	8	0	553
Hour Total	1992	41	0	2033
15:15	606	14	0	620
15:30	643	16	0	659
15:45	647	11	0	658
16:00	775	16	0	791
Hour Total	2671	57	0	2728
16:15	714	7	0	721
16:30	764	6	0	770
16:45	794	4	0	798
17:00	757	4	0	761
Hour Total	3029	21	0	3050
17:15	818	8	0	826
17:30	857	6	0	863
17:45	832	4	0	836
18:00	771	4	0	775
Hour Total	3278	22	0	3300

CLASSIFICATION SUMMARY
Thu 5/30/2019

Station #: ADT A
Site ID: ADT A
Location: US 50, btw Jackson St and US 50
Direction: WEST
Lane: 1

File: D0529001.PRN
Job #: 38.87209, -77.09559
GPS: Car/Medium/Heavy

TIME	1	2	3	Total
18:15	699	5	0	704
18:30	671	5	0	676
18:45	745	6	0	751
19:00	639	5	0	644
Hour Total	2754	21	0	2775
19:15	648	6	1	655
19:30	538	4	0	542
19:45	451	1	0	452
20:00	453	2	0	455
Hour Total	2090	13	1	2104
20:15	403	2	0	405
20:30	348	1	0	349
20:45	334	4	0	338
21:00	261	0	0	261
Hour Total	1346	7	0	1353
21:15	303	1	0	304
21:30	295	2	0	297
21:45	327	2	0	329
22:00	248	2	0	250
Hour Total	1173	7	0	1180
22:15	319	3	0	322
22:30	235	2	0	237
22:45	225	0	0	225
23:00	183	1	0	184
Hour Total	962	6	0	968
23:15	196	0	0	196
23:30	150	0	0	150
23:45	134	2	0	136
24:00	107	2	0	109
Hour Total	587	4	0	591
24 HR TOTAL	32735	529	18	33282
PERCENTS	98.4%	1.6%	0.1%	100.0%

Passenger Vehicles 100.0% Trucks & Buses 0.0%

AM Times	08:00	10:30	07:15	08:00
AM Peaks	1842	54	4	1886
PM Times	17:15	15:15	11:30	17:15
PM Peaks	3278	57	2	3300

Station #: ADT A
Site ID: ADT A
Location: US 50, btw Jackson St and US 50
Direction: WEST
Lane: 1

File: D0529001.PRN
Job #: 38.87209, -77.09559
GPS: Car/Medium/Heavy

TIME	1	2	3	Total
GRAND TOTAL	65860	1037	39	66936
PERCENTS	98.4%	1.5%	0.1%	100.0%

CLASSIFICATION SUMMARY
Wed 5/29/2019

Station #: ADT A
Site ID: ADT A
Location: US 50, btw Jackson St and US 50
Direction: EAST
Lane: 2

File: D0529001.PRN
Job #: 38.87209, -77.09559
GPS: Car/Medium/Heavy

TIME	1	2	3	Total
00:15	50	0	0	50
00:30	60	0	0	60
00:45	38	1	0	39
01:00	42	2	0	44
Hour Total	190	3	0	193
01:15	27	0	0	27
01:30	34	0	0	34
01:45	24	0	0	24
02:00	21	1	0	22
Hour Total	106	1	0	107
02:15	21	1	0	22
02:30	12	0	0	12
02:45	13	0	0	13
03:00	14	1	0	15
Hour Total	60	2	0	62
03:15	21	0	0	21
03:30	25	0	0	25
03:45	32	0	0	32
04:00	43	0	0	43
Hour Total	121	0	0	121
04:15	53	0	0	53
04:30	77	0	0	77
04:45	126	4	0	130
05:00	147	3	0	150
Hour Total	403	7	0	410
05:15	134	3	0	137
05:30	218	2	1	221
05:45	366	6	0	372
06:00	441	5	0	446
Hour Total	1159	16	1	1176
06:15	500	9	0	509
06:30	604	10	0	614
06:45	789	12	1	802
07:00	869	12	0	881
Hour Total	2762	43	1	2806
07:15	842	9	1	852
07:30	904	14	0	918
07:45	894	10	0	904
08:00	772	26	0	798
Hour Total	3412	59	1	3472
08:15	819	8	2	829
08:30	762	11	1	774
08:45	820	15	0	835
09:00	828	13	0	841
Hour Total	3229	47	3	3279

CLASSIFICATION SUMMARY
Wed 5/29/2019

Station #: ADT A
Site ID: ADT A
Location: US 50, btw Jackson St and US 50
Direction: EAST
Lane: 2

File: D0529001.PRN
Job #: 38.87209, -77.09559
GPS: Car/Medium/Heavy

TIME	1	2	3	Total
09:15	832	10	0	842
09:30	818	13	2	833
09:45	646	11	0	657
10:00	575	15	0	590
Hour Total	2871	49	2	2922
10:15	489	10	2	501
10:30	428	9	0	437
10:45	428	13	1	442
11:00	499	13	1	513
Hour Total	1844	45	4	1893
11:15	456	13	0	469
11:30	449	8	1	458
11:45	443	10	0	453
12:00	413	7	2	422
Hour Total	1761	38	3	1802
12:15	407	11	0	418
12:30	408	6	0	414
12:45	437	12	0	449
13:00	428	12	2	442
Hour Total	1680	41	2	1723
13:15	413	11	1	425
13:30	315	8	3	326
13:45	373	4	1	378
14:00	398	5	4	407
Hour Total	1499	28	9	1536
14:15	441	8	0	449
14:30	498	13	1	512
14:45	448	11	0	459
15:00	473	10	0	483
Hour Total	1860	42	1	1903
15:15	562	15	0	577
15:30	531	12	0	543
15:45	541	13	0	554
16:00	555	9	0	564
Hour Total	2189	49	0	2238
16:15	545	9	1	555
16:30	620	12	0	632
16:45	593	15	0	608
17:00	593	13	0	606
Hour Total	2351	49	1	2401
17:15	577	12	0	589
17:30	574	6	0	580
17:45	579	10	0	589
18:00	607	10	0	617
Hour Total	2337	38	0	2375

CLASSIFICATION SUMMARY
Wed 5/29/2019

Station #: ADT A
Site ID: ADT A
Location: US 50, btw Jackson St and US 50
Direction: EAST
Lane: 2

File: D0529001.PRN
Job #: 38.87209, -77.09559
GPS: Car/Medium/Heavy

TIME	1	2	3	Total
18:15	592	8	0	600
18:30	531	11	0	542
18:45	493	11	0	504
19:00	428	2	0	430
Hour Total	2044	32	0	2076
19:15	476	4	0	480
19:30	408	2	0	410
19:45	363	3	0	366
20:00	346	2	0	348
Hour Total	1593	11	0	1604
20:15	316	1	0	317
20:30	291	4	0	295
20:45	276	3	0	279
21:00	313	0	0	313
Hour Total	1196	8	0	1204
21:15	273	1	0	274
21:30	273	1	0	274
21:45	240	1	0	241
22:00	262	0	0	262
Hour Total	1048	3	0	1051
22:15	205	0	0	205
22:30	217	1	0	218
22:45	156	0	0	156
23:00	161	0	0	161
Hour Total	739	1	0	740
23:15	146	0	0	146
23:30	104	0	0	104
23:45	91	0	0	91
24:00	72	1	0	73
Hour Total	413	1	0	414
24 HR TOTAL	36867	613	28	37508
PERCENTS	98.3%	1.6%	0.1%	100.0%

Passenger Vehicles 100.0% Trucks & Buses 0.0%

AM Times	07:00	08:00	09:30	07:00
AM Peaks	3509	60	4	3555
PM Times	16:30	16:30	13:15	16:30
PM Peaks	2383	52	9	2435

CLASSIFICATION SUMMARY
Thu 5/30/2019

Station #: ADT A
Site ID: ADT A
Location: US 50, btw Jackson St and US 50
Direction: EAST
Lane: 2

File: D0529001.PRN
Job #: 38.87209, -77.09559
GPS: Car/Medium/Heavy

TIME	1	2	3	Total
00:15	75	1	0	76
00:30	47	0	0	47
00:45	46	0	0	46
01:00	37	0	1	38
Hour Total	205	1	1	207
01:15	29	0	0	29
01:30	33	0	0	33
01:45	18	0	0	18
02:00	24	0	0	24
Hour Total	104	0	0	104
02:15	23	0	1	24
02:30	15	1	0	16
02:45	19	0	0	19
03:00	13	2	0	15
Hour Total	70	3	1	74
03:15	20	0	0	20
03:30	37	0	1	38
03:45	34	0	0	34
04:00	39	1	1	41
Hour Total	130	1	2	133
04:15	34	0	0	34
04:30	68	0	0	68
04:45	94	3	1	98
05:00	121	1	0	122
Hour Total	317	4	1	322
05:15	143	1	0	144
05:30	225	4	0	229
05:45	332	5	1	338
06:00	396	7	0	403
Hour Total	1096	17	1	1114
06:15	529	6	0	535
06:30	615	10	0	625
06:45	774	11	0	785
07:00	843	13	1	857
Hour Total	2761	40	1	2802
07:15	836	14	0	850
07:30	853	14	2	869
07:45	836	14	0	850
08:00	799	22	0	821
Hour Total	3324	64	2	3390
08:15	818	14	0	832
08:30	819	6	1	826
08:45	833	13	1	847
09:00	833	16	0	849
Hour Total	3303	49	2	3354

CLASSIFICATION SUMMARY
Thu 5/30/2019

Station #: ADT A
Site ID: ADT A
Location: US 50, btw Jackson St and US 50
Direction: EAST
Lane: 2

File: D0529001.PRN
Job #: 38.87209, -77.09559
GPS: Car/Medium/Heavy

TIME	1	2	3	Total
09:15	784	11	0	795
09:30	770	12	0	782
09:45	712	11	0	723
10:00	714	11	0	725
Hour Total	2980	45	0	3025
10:15	546	12	1	559
10:30	538	12	0	550
10:45	455	11	3	469
11:00	421	11	5	437
Hour Total	1960	46	9	2015
11:15	499	16	0	515
11:30	480	14	0	494
11:45	445	12	0	457
12:00	440	13	0	453
Hour Total	1864	55	0	1919
12:15	406	6	0	412
12:30	422	11	0	433
12:45	394	15	0	409
13:00	434	16	0	450
Hour Total	1656	48	0	1704
13:15	427	8	0	435
13:30	369	10	0	379
13:45	426	9	2	437
14:00	430	9	0	439
Hour Total	1652	36	2	1690
14:15	436	8	1	445
14:30	460	13	1	474
14:45	518	12	0	530
15:00	485	18	0	503
Hour Total	1899	51	2	1952
15:15	562	13	1	576
15:30	552	9	0	561
15:45	543	11	0	554
16:00	573	11	0	584
Hour Total	2230	44	1	2275
16:15	480	11	0	491
16:30	598	10	0	608
16:45	566	17	0	583
17:00	595	5	0	600
Hour Total	2239	43	0	2282
17:15	584	10	2	596
17:30	600	12	0	612
17:45	581	8	0	589
18:00	588	7	0	595
Hour Total	2353	37	2	2392

CLASSIFICATION SUMMARY
Thu 5/30/2019

Station #: ADT A
Site ID: ADT A
Location: US 50, btw Jackson St and US 50
Direction: EAST
Lane: 2

File: D0529001.PRN
Job #: 38.87209, -77.09559
GPS: Car/Medium/Heavy

TIME	1	2	3	Total
18:15	571	9	0	580
18:30	545	4	0	549
18:45	605	7	0	612
19:00	510	5	0	515
Hour Total	2231	25	0	2256
19:15	407	2	0	409
19:30	438	4	0	442
19:45	416	3	0	419
20:00	371	1	0	372
Hour Total	1632	10	0	1642
20:15	352	0	1	353
20:30	333	0	0	333
20:45	286	2	0	288
21:00	262	1	0	263
Hour Total	1233	3	1	1237
21:15	269	2	0	271
21:30	280	1	0	281
21:45	253	0	0	253
22:00	225	0	0	225
Hour Total	1027	3	0	1030
22:15	199	0	0	199
22:30	180	0	0	180
22:45	180	1	0	181
23:00	154	0	0	154
Hour Total	713	1	0	714
23:15	131	0	0	131
23:30	97	0	0	97
23:45	75	1	0	76
24:00	85	0	0	85
Hour Total	388	1	0	389
24 HR TOTAL	37367	627	28	38022
PERCENTS	98.3%	1.6%	0.1%	100.0%

Passenger Vehicles 100.0% Trucks & Buses 0.0%

AM Times	07:00	07:15	10:15	07:00
AM Peaks	3368	64	9	3426
PM Times	17:00	14:30	13:45	17:00
PM Peaks	2360	56	4	2397

Station #: ADT A
Site ID: ADT A
Location: US 50, btw Jackson St and US 50
Direction: EAST
Lane: 2

File: D0529001.PRN
Job #: 38.87209, -77.09559
GPS: Car/Medium/Heavy

TIME	1	2	3	Total
GRAND TOTAL	74234	1240	56	75530
PERCENTS	98.3%	1.6%	0.1%	100.0%

Peggy Malone and Associates

CLASSIFICATION SUMMARY
Wed 5/29/2019

Station #: ADT A
Site ID: ADT A
Location: US 50, btw Jackson St and US 50
Direction: WEST
Lane: 1

File: D0529001.PRN
Job #: 38.87209, -77.09559
GPS: Car/Medium/Heavy

TIME	1	2	3	Total
00:15	103	2	0	105
00:30	72	0	0	72
00:45	50	0	0	50
01:00	46	0	0	46
Hour Total	271	2	0	273
01:15	43	0	0	43
01:30	31	0	0	31
01:45	27	0	0	27
02:00	22	2	0	24
Hour Total	123	2	0	125
02:15	26	0	0	26
02:30	35	0	0	35
02:45	25	0	0	25
03:00	21	0	0	21
Hour Total	107	0	0	107
03:15	18	2	0	20
03:30	19	0	0	19
03:45	16	1	0	17
04:00	16	0	0	16
Hour Total	69	3	0	72
04:15	20	0	0	20
04:30	21	1	1	23
04:45	29	1	0	30
05:00	48	0	0	48
Hour Total	118	2	1	121
05:15	57	1	0	58
05:30	101	3	0	104
05:45	137	4	0	141
06:00	156	3	1	160
Hour Total	451	11	1	463
06:15	189	4	0	193
06:30	238	2	0	240
06:45	305	3	1	309
07:00	328	5	0	333
Hour Total	1060	14	1	1075
07:15	347	11	0	358
07:30	491	14	0	505
07:45	451	15	0	466
08:00	531	16	0	547
Hour Total	1820	56	0	1876
08:15	513	16	0	529
08:30	435	5	0	440
08:45	478	6	1	485
09:00	418	13	0	431
Hour Total	1844	40	1	1885

Peggy Malone and Associates

CLASSIFICATION SUMMARY
Wed 5/29/2019

Station #: ADT A
Site ID: ADT A
Location: US 50, btw Jackson St and US 50
Direction: WEST
Lane: 1

File: D0529001.PRN
Job #: 38.87209, -77.09559
GPS: Car/Medium/Heavy

TIME	1	2	3	Total
09:15	350	11	0	361
09:30	407	14	0	421
09:45	333	9	0	342
10:00	372	14	0	386
Hour Total	1462	48	0	1510
10:15	291	10	0	301
10:30	303	8	2	313
10:45	290	5	1	296
11:00	342	14	3	359
Hour Total	1226	37	6	1269
11:15	309	8	1	318
11:30	333	7	0	340
11:45	326	7	2	335
12:00	336	9	1	346
Hour Total	1304	31	4	1339
12:15	401	6	1	408
12:30	400	4	0	404
12:45	374	6	1	381
13:00	365	2	0	367
Hour Total	1540	18	2	1560
13:15	407	7	0	414
13:30	422	5	0	427
13:45	409	8	0	417
14:00	429	13	0	442
Hour Total	1667	33	0	1700
14:15	399	11	2	412
14:30	433	8	1	442
14:45	551	10	0	561
15:00	589	10	0	599
Hour Total	1972	39	3	2014
15:15	581	8	0	589
15:30	658	11	0	669
15:45	767	14	1	782
16:00	774	12	0	786
Hour Total	2780	45	1	2826
16:15	742	17	1	760
16:30	779	12	0	791
16:45	767	4	0	771
17:00	782	17	0	799
Hour Total	3070	50	1	3121
17:15	871	4	0	875
17:30	783	6	0	789
17:45	805	5	0	810
18:00	775	8	0	783
Hour Total	3234	23	0	3257

CLASSIFICATION SUMMARY
Wed 5/29/2019

Station #: ADT A
Site ID: ADT A
Location: US 50, btw Jackson St and US 50
Direction: WEST
Lane: 1

File: D0529001.PRN
Job #: 38.87209, -77.09559
GPS: Car/Medium/Heavy

TIME	1	2	3	Total
18:15	802	7	0	809
18:30	725	4	0	729
18:45	769	7	0	776
19:00	599	5	0	604
Hour Total	2895	23	0	2918
19:15	552	7	0	559
19:30	479	2	0	481
19:45	436	2	0	438
20:00	438	1	0	439
Hour Total	1905	12	0	1917
20:15	400	1	0	401
20:30	350	1	0	351
20:45	331	2	0	333
21:00	310	0	0	310
Hour Total	1391	4	0	1395
21:15	299	2	0	301
21:30	316	1	0	317
21:45	282	1	0	283
22:00	289	2	0	291
Hour Total	1186	6	0	1192
22:15	321	2	0	323
22:30	254	1	0	255
22:45	245	2	0	247
23:00	211	0	0	211
Hour Total	1031	5	0	1036
23:15	196	1	0	197
23:30	148	1	0	149
23:45	145	1	0	146
24:00	110	1	0	111
Hour Total	599	4	0	603
24 HR TOTAL	33125	508	21	33654
PERCENTS	98.4%	1.5%	0.1%	100.0%

Passenger Vehicles 100.0% Trucks & Buses 0.0%

AM Times	07:30	07:30	10:30	07:30
AM Peaks	1986	61	7	2047
PM Times	17:00	15:45	11:30	17:00
PM Peaks	3241	55	4	3273

CLASSIFICATION SUMMARY
Thu 5/30/2019

Station #: ADT A
Site ID: ADT A
Location: US 50, btw Jackson St and US 50
Direction: WEST
Lane: 1

File: D0529001.PRN
Job #: 38.87209, -77.09559
GPS: Car/Medium/Heavy

TIME	1	2	3	Total
00:15	83	1	0	84
00:30	82	0	0	82
00:45	63	0	0	63
01:00	46	0	0	46
Hour Total	274	1	0	275
01:15	41	0	0	41
01:30	50	0	0	50
01:45	45	0	0	45
02:00	36	1	0	37
Hour Total	172	1	0	173
02:15	31	0	0	31
02:30	31	0	0	31
02:45	20	0	0	20
03:00	28	1	0	29
Hour Total	110	1	0	111
03:15	18	0	0	18
03:30	18	0	0	18
03:45	13	0	0	13
04:00	16	0	0	16
Hour Total	65	0	0	65
04:15	16	0	0	16
04:30	34	1	0	35
04:45	32	1	1	34
05:00	53	0	0	53
Hour Total	135	2	1	138
05:15	52	0	1	53
05:30	89	4	0	93
05:45	148	0	0	148
06:00	171	2	1	174
Hour Total	460	6	2	468
06:15	184	7	1	192
06:30	195	5	0	200
06:45	280	8	0	288
07:00	315	3	0	318
Hour Total	974	23	1	998
07:15	379	11	1	391
07:30	434	8	2	444
07:45	430	11	0	441
08:00	495	11	1	507
Hour Total	1738	41	4	1783
08:15	474	14	0	488
08:30	428	10	2	440
08:45	445	6	0	451
09:00	395	9	1	405
Hour Total	1742	39	3	1784

CLASSIFICATION SUMMARY
Thu 5/30/2019

Station #: ADT A
Site ID: ADT A
Location: US 50, btw Jackson St and US 50
Direction: WEST
Lane: 1

File: D0529001.PRN
Job #: 38.87209, -77.09559
GPS: Car/Medium/Heavy

TIME	1	2	3	Total
09:15	368	9	0	377
09:30	347	9	1	357
09:45	303	9	0	312
10:00	375	7	0	382
Hour Total	1393	34	1	1428
10:15	300	10	0	310
10:30	291	11	1	303
10:45	299	19	0	318
11:00	319	11	1	331
Hour Total	1209	51	2	1262
11:15	318	13	1	332
11:30	317	11	0	328
11:45	347	12	0	359
12:00	361	9	1	371
Hour Total	1343	45	2	1390
12:15	378	8	1	387
12:30	397	14	0	411
12:45	400	13	0	413
13:00	402	12	0	414
Hour Total	1577	47	1	1625
13:15	437	6	0	443
13:30	432	11	0	443
13:45	402	9	0	411
14:00	390	13	0	403
Hour Total	1661	39	0	1700
14:15	434	13	0	447
14:30	506	9	0	515
14:45	507	11	0	518
15:00	545	8	0	553
Hour Total	1992	41	0	2033
15:15	606	14	0	620
15:30	643	16	0	659
15:45	647	11	0	658
16:00	775	16	0	791
Hour Total	2671	57	0	2728
16:15	714	7	0	721
16:30	764	6	0	770
16:45	794	4	0	798
17:00	757	4	0	761
Hour Total	3029	21	0	3050
17:15	818	8	0	826
17:30	857	6	0	863
17:45	832	4	0	836
18:00	771	4	0	775
Hour Total	3278	22	0	3300

CLASSIFICATION SUMMARY
Thu 5/30/2019

Station #: ADT A
Site ID: ADT A
Location: US 50, btw Jackson St and US 50
Direction: WEST
Lane: 1

File: D0529001.PRN
Job #: 38.87209, -77.09559
GPS: Car/Medium/Heavy

TIME	1	2	3	Total
18:15	699	5	0	704
18:30	671	5	0	676
18:45	745	6	0	751
19:00	639	5	0	644
Hour Total	2754	21	0	2775
19:15	648	6	1	655
19:30	538	4	0	542
19:45	451	1	0	452
20:00	453	2	0	455
Hour Total	2090	13	1	2104
20:15	403	2	0	405
20:30	348	1	0	349
20:45	334	4	0	338
21:00	261	0	0	261
Hour Total	1346	7	0	1353
21:15	303	1	0	304
21:30	295	2	0	297
21:45	327	2	0	329
22:00	248	2	0	250
Hour Total	1173	7	0	1180
22:15	319	3	0	322
22:30	235	2	0	237
22:45	225	0	0	225
23:00	183	1	0	184
Hour Total	962	6	0	968
23:15	196	0	0	196
23:30	150	0	0	150
23:45	134	2	0	136
24:00	107	2	0	109
Hour Total	587	4	0	591
24 HR TOTAL	32735	529	18	33282
PERCENTS	98.4%	1.6%	0.1%	100.0%

Passenger Vehicles 100.0% Trucks & Buses 0.0%

AM Times	08:00	10:30	07:15	08:00
AM Peaks	1842	54	4	1886
PM Times	17:15	15:15	11:30	17:15
PM Peaks	3278	57	2	3300

Station #: ADT A
Site ID: ADT A
Location: US 50, btw Jackson St and US 50
Direction: WEST
Lane: 1

File: D0529001.PRN
Job #: 38.87209, -77.09559
GPS: Car/Medium/Heavy

TIME	1	2	3	Total
GRAND TOTAL	65860	1037	39	66936
PERCENTS	98.4%	1.5%	0.1%	100.0%

CLASSIFICATION SUMMARY
Wed 5/29/2019

Station #: ADT A
Site ID: ADT A
Location: US 50, btw Jackson St and US 50
Direction: EAST
Lane: 2

File: D0529001.PRN
Job #: 38.87209, -77.09559
GPS: Car/Medium/Heavy

TIME	1	2	3	Total
00:15	50	0	0	50
00:30	60	0	0	60
00:45	38	1	0	39
01:00	42	2	0	44
Hour Total	190	3	0	193
01:15	27	0	0	27
01:30	34	0	0	34
01:45	24	0	0	24
02:00	21	1	0	22
Hour Total	106	1	0	107
02:15	21	1	0	22
02:30	12	0	0	12
02:45	13	0	0	13
03:00	14	1	0	15
Hour Total	60	2	0	62
03:15	21	0	0	21
03:30	25	0	0	25
03:45	32	0	0	32
04:00	43	0	0	43
Hour Total	121	0	0	121
04:15	53	0	0	53
04:30	77	0	0	77
04:45	126	4	0	130
05:00	147	3	0	150
Hour Total	403	7	0	410
05:15	134	3	0	137
05:30	218	2	1	221
05:45	366	6	0	372
06:00	441	5	0	446
Hour Total	1159	16	1	1176
06:15	500	9	0	509
06:30	604	10	0	614
06:45	789	12	1	802
07:00	869	12	0	881
Hour Total	2762	43	1	2806
07:15	842	9	1	852
07:30	904	14	0	918
07:45	894	10	0	904
08:00	772	26	0	798
Hour Total	3412	59	1	3472
08:15	819	8	2	829
08:30	762	11	1	774
08:45	820	15	0	835
09:00	828	13	0	841
Hour Total	3229	47	3	3279

CLASSIFICATION SUMMARY
Wed 5/29/2019

Station #: ADT A
Site ID: ADT A
Location: US 50, btw Jackson St and US 50
Direction: EAST
Lane: 2

File: D0529001.PRN
Job #: 38.87209, -77.09559
GPS: Car/Medium/Heavy

TIME	1	2	3	Total
09:15	832	10	0	842
09:30	818	13	2	833
09:45	646	11	0	657
10:00	575	15	0	590
Hour Total	2871	49	2	2922
10:15	489	10	2	501
10:30	428	9	0	437
10:45	428	13	1	442
11:00	499	13	1	513
Hour Total	1844	45	4	1893
11:15	456	13	0	469
11:30	449	8	1	458
11:45	443	10	0	453
12:00	413	7	2	422
Hour Total	1761	38	3	1802
12:15	407	11	0	418
12:30	408	6	0	414
12:45	437	12	0	449
13:00	428	12	2	442
Hour Total	1680	41	2	1723
13:15	413	11	1	425
13:30	315	8	3	326
13:45	373	4	1	378
14:00	398	5	4	407
Hour Total	1499	28	9	1536
14:15	441	8	0	449
14:30	498	13	1	512
14:45	448	11	0	459
15:00	473	10	0	483
Hour Total	1860	42	1	1903
15:15	562	15	0	577
15:30	531	12	0	543
15:45	541	13	0	554
16:00	555	9	0	564
Hour Total	2189	49	0	2238
16:15	545	9	1	555
16:30	620	12	0	632
16:45	593	15	0	608
17:00	593	13	0	606
Hour Total	2351	49	1	2401
17:15	577	12	0	589
17:30	574	6	0	580
17:45	579	10	0	589
18:00	607	10	0	617
Hour Total	2337	38	0	2375

CLASSIFICATION SUMMARY
Wed 5/29/2019

Station #: ADT A
Site ID: ADT A
Location: US 50, btw Jackson St and US 50
Direction: EAST
Lane: 2

File: D0529001.PRN
Job #: 38.87209, -77.09559
GPS: Car/Medium/Heavy

TIME	1	2	3	Total
18:15	592	8	0	600
18:30	531	11	0	542
18:45	493	11	0	504
19:00	428	2	0	430
Hour Total	2044	32	0	2076
19:15	476	4	0	480
19:30	408	2	0	410
19:45	363	3	0	366
20:00	346	2	0	348
Hour Total	1593	11	0	1604
20:15	316	1	0	317
20:30	291	4	0	295
20:45	276	3	0	279
21:00	313	0	0	313
Hour Total	1196	8	0	1204
21:15	273	1	0	274
21:30	273	1	0	274
21:45	240	1	0	241
22:00	262	0	0	262
Hour Total	1048	3	0	1051
22:15	205	0	0	205
22:30	217	1	0	218
22:45	156	0	0	156
23:00	161	0	0	161
Hour Total	739	1	0	740
23:15	146	0	0	146
23:30	104	0	0	104
23:45	91	0	0	91
24:00	72	1	0	73
Hour Total	413	1	0	414
24 HR TOTAL	36867	613	28	37508
PERCENTS	98.3%	1.6%	0.1%	100.0%

Passenger Vehicles 100.0% Trucks & Buses 0.0%

AM Times	07:00	08:00	09:30	07:00
AM Peaks	3509	60	4	3555
PM Times	16:30	16:30	13:15	16:30
PM Peaks	2383	52	9	2435

CLASSIFICATION SUMMARY
Thu 5/30/2019

Station #: ADT A
Site ID: ADT A
Location: US 50, btw Jackson St and US 50
Direction: EAST
Lane: 2

File: D0529001.PRN
Job #: 38.87209, -77.09559
GPS: Car/Medium/Heavy

TIME	1	2	3	Total
00:15	75	1	0	76
00:30	47	0	0	47
00:45	46	0	0	46
01:00	37	0	1	38
Hour Total	205	1	1	207
01:15	29	0	0	29
01:30	33	0	0	33
01:45	18	0	0	18
02:00	24	0	0	24
Hour Total	104	0	0	104
02:15	23	0	1	24
02:30	15	1	0	16
02:45	19	0	0	19
03:00	13	2	0	15
Hour Total	70	3	1	74
03:15	20	0	0	20
03:30	37	0	1	38
03:45	34	0	0	34
04:00	39	1	1	41
Hour Total	130	1	2	133
04:15	34	0	0	34
04:30	68	0	0	68
04:45	94	3	1	98
05:00	121	1	0	122
Hour Total	317	4	1	322
05:15	143	1	0	144
05:30	225	4	0	229
05:45	332	5	1	338
06:00	396	7	0	403
Hour Total	1096	17	1	1114
06:15	529	6	0	535
06:30	615	10	0	625
06:45	774	11	0	785
07:00	843	13	1	857
Hour Total	2761	40	1	2802
07:15	836	14	0	850
07:30	853	14	2	869
07:45	836	14	0	850
08:00	799	22	0	821
Hour Total	3324	64	2	3390
08:15	818	14	0	832
08:30	819	6	1	826
08:45	833	13	1	847
09:00	833	16	0	849
Hour Total	3303	49	2	3354

CLASSIFICATION SUMMARY
Thu 5/30/2019

Station #: ADT A
Site ID: ADT A
Location: US 50, btw Jackson St and US 50
Direction: EAST
Lane: 2

File: D0529001.PRN
Job #: 38.87209, -77.09559
GPS: Car/Medium/Heavy

TIME	1	2	3	Total
09:15	784	11	0	795
09:30	770	12	0	782
09:45	712	11	0	723
10:00	714	11	0	725
Hour Total	2980	45	0	3025
10:15	546	12	1	559
10:30	538	12	0	550
10:45	455	11	3	469
11:00	421	11	5	437
Hour Total	1960	46	9	2015
11:15	499	16	0	515
11:30	480	14	0	494
11:45	445	12	0	457
12:00	440	13	0	453
Hour Total	1864	55	0	1919
12:15	406	6	0	412
12:30	422	11	0	433
12:45	394	15	0	409
13:00	434	16	0	450
Hour Total	1656	48	0	1704
13:15	427	8	0	435
13:30	369	10	0	379
13:45	426	9	2	437
14:00	430	9	0	439
Hour Total	1652	36	2	1690
14:15	436	8	1	445
14:30	460	13	1	474
14:45	518	12	0	530
15:00	485	18	0	503
Hour Total	1899	51	2	1952
15:15	562	13	1	576
15:30	552	9	0	561
15:45	543	11	0	554
16:00	573	11	0	584
Hour Total	2230	44	1	2275
16:15	480	11	0	491
16:30	598	10	0	608
16:45	566	17	0	583
17:00	595	5	0	600
Hour Total	2239	43	0	2282
17:15	584	10	2	596
17:30	600	12	0	612
17:45	581	8	0	589
18:00	588	7	0	595
Hour Total	2353	37	2	2392

CLASSIFICATION SUMMARY
Thu 5/30/2019

Station #: ADT A
Site ID: ADT A
Location: US 50, btw Jackson St and US 50
Direction: EAST
Lane: 2

File: D0529001.PRN
Job #: 38.87209, -77.09559
GPS: Car/Medium/Heavy

TIME	1	2	3	Total
18:15	571	9	0	580
18:30	545	4	0	549
18:45	605	7	0	612
19:00	510	5	0	515
Hour Total	2231	25	0	2256
19:15	407	2	0	409
19:30	438	4	0	442
19:45	416	3	0	419
20:00	371	1	0	372
Hour Total	1632	10	0	1642
20:15	352	0	1	353
20:30	333	0	0	333
20:45	286	2	0	288
21:00	262	1	0	263
Hour Total	1233	3	1	1237
21:15	269	2	0	271
21:30	280	1	0	281
21:45	253	0	0	253
22:00	225	0	0	225
Hour Total	1027	3	0	1030
22:15	199	0	0	199
22:30	180	0	0	180
22:45	180	1	0	181
23:00	154	0	0	154
Hour Total	713	1	0	714
23:15	131	0	0	131
23:30	97	0	0	97
23:45	75	1	0	76
24:00	85	0	0	85
Hour Total	388	1	0	389
24 HR TOTAL	37367	627	28	38022
PERCENTS	98.3%	1.6%	0.1%	100.0%

Passenger Vehicles 100.0% Trucks & Buses 0.0%

AM Times	07:00	07:15	10:15	07:00
AM Peaks	3368	64	9	3426
PM Times	17:00	14:30	13:45	17:00
PM Peaks	2360	56	4	2397

Station #: ADT A
Site ID: ADT A
Location: US 50, btw Jackson St and US 50
Direction: EAST
Lane: 2

File: D0529001.PRN
Job #: 38.87209, -77.09559
GPS: Car/Medium/Heavy

TIME	1	2	3	Total
GRAND TOTAL	74234	1240	56	75530
PERCENTS	98.3%	1.6%	0.1%	100.0%

Peggy Malone & Associates, Inc.

(888) 247-8602

File Name : 1-N Glebe Rd and US 50 WB Ramps AM
Site Code :
Start Date : 5/29/2019
Page No : 1

Groups Printed- Car

	N. Glebe Rd Southbound					US 50 WB Off Westbound					N Glebe Rd Northbound					US 50 WB On Eastbound					
Start Time	Right	Thru	Left	Peds	App. Total	Right	Thru	Left	Peds	App. Total	Right	Thru	Left	Peds	App. Total	Right	Thru	Left	Peds	App. Total	Int. Total
06:30 AM	17	84	0	0	101	33	1	6	1	41	0	206	45	0	251	0	0	0	1	1	394
06:45 AM	19	96	0	1	116	43	2	7	4	56	0	269	49	0	318	0	0	0	0	0	490
Total	36	180	0	1	217	76	3	13	5	97	0	475	94	0	569	0	0	0	1	1	884
07:00 AM	25	134	0	2	161	41	0	9	7	57	0	281	71	0	352	0	0	0	5	5	575
07:15 AM	28	158	0	0	186	42	0	7	5	54	0	297	91	0	388	0	0	0	1	1	629
07:30 AM	23	150	0	0	173	29	1	5	9	44	0	304	91	0	395	0	0	0	3	3	615
07:45 AM	38	226	0	0	264	44	1	8	2	55	0	318	107	0	425	0	0	0	4	4	748
Total	114	668	0	2	784	156	2	29	23	210	0	1200	360	0	1560	0	0	0	13	13	2567
08:00 AM	32	174	0	0	206	46	0	9	3	58	0	302	114	0	416	0	0	0	1	1	681
08:15 AM	29	173	0	2	204	29	2	13	7	51	0	297	86	0	383	0	0	0	0	0	638
08:30 AM	20	165	0	0	185	44	1	14	4	63	0	267	90	0	357	0	0	0	0	0	605
08:45 AM	31	170	1	2	204	49	5	9	7	70	0	352	82	0	434	0	0	0	1	1	709
Total	112	682	1	4	799	168	8	45	21	242	0	1218	372	0	1590	0	0	0	2	2	2633
09:00 AM	29	148	0	1	178	45	0	9	2	56	0	282	71	0	353	0	0	0	1	1	588
09:15 AM	37	129	0	0	166	46	0	11	0	57	0	253	67	0	320	0	0	0	1	1	544
Grand Total	328	1807	1	8	2144	491	13	107	51	662	0	3428	964	0	4392	0	0	0	18	18	7216
Apprch %	15.3	84.3	0	0.4		74.2	2	16.2	7.7		0	78.1	21.9	0		0	0	0	100		
Total %	4.5	25	0	0.1	29.7	6.8	0.2	1.5	0.7	9.2	0	47.5	13.4	0	60.9	0	0	0	0.2	0.2	

	N. Glebe Rd Southbound				US 50 WB Off Westbound				N Glebe Rd Northbound				US 50 WB On Eastbound				
Start Time	Right	Thru	Left	App. Total	Right	Thru	Left	App. Total	Right	Thru	Left	App. Total	Right	Thru	Left	App. Total	Int. Total
Peak Hour Analysis From 06:30 AM to 09:15 AM - Peak 1 of 1																	
Peak Hour for Entire Intersection Begins at 07:30 AM																	
07:30 AM	23	150	0	173	29	1	5	35	0	304	91	395	0	0	0	0	603
07:45 AM	**38**	**226**	0	**264**	44	1	8	53	0	**318**	107	**425**	0	0	0	0	**742**
08:00 AM	32	174	0	206	**46**	0	9	**55**	0	302	**114**	416	0	0	0	0	677
08:15 AM	29	173	0	202	29	**2**	**13**	44	0	297	86	383	0	0	0	0	629
Total Volume	122	723	0	845	148	4	35	187	0	1221	398	1619	0	0	0	0	2651
% App. Total	14.4	85.6	0		79.1	2.1	18.7		0	75.4	24.6		0	0	0		
PHF	.803	.800	.000	.800	.804	.500	.673	.850	.000	.960	.873	.952	.000	.000	.000	.000	.893

Peggy Malone & Associates, Inc.

(888) 247-8602

File Name : 1-N Glebe Rd and US 50 WB Ramps AM
Site Code :
Start Date : 5/29/2019
Page No : 1

Groups Printed- Truck

	N. Glebe Rd Southbound					US 50 WB Off Westbound					N Glebe Rd Northbound					US 50 WB On Eastbound					
Start Time	Right	Thru	Left	Peds	App. Total	Right	Thru	Left	Peds	App. Total	Right	Thru	Left	Peds	App. Total	Right	Thru	Left	Peds	App. Total	Int. Total
06:30 AM	1	6	0	0	7	1	0	0	0	1	0	12	0	0	12	0	0	0	0	0	20
06:45 AM	1	7	0	0	8	1	0	0	0	1	0	14	0	0	14	0	0	0	0	0	23
Total	2	13	0	0	15	2	0	0	0	2	0	26	0	0	26	0	0	0	0	0	43
07:00 AM	1	8	0	0	9	1	0	0	0	1	0	17	0	0	17	0	0	0	0	0	27
07:15 AM	1	8	0	0	9	0	0	0	0	0	0	14	3	0	17	0	0	0	0	0	26
07:30 AM	2	12	0	0	14	0	0	0	0	0	0	19	3	0	22	0	0	0	0	0	36
07:45 AM	2	9	1	0	12	0	0	0	0	0	0	14	1	0	15	0	0	0	0	0	27
Total	6	37	1	0	44	1	0	0	0	1	0	64	7	0	71	0	0	0	0	0	116
08:00 AM	2	6	0	0	8	2	0	1	0	3	0	26	4	0	30	0	0	0	0	0	41
08:15 AM	0	21	0	0	21	0	0	0	0	0	0	21	6	0	27	0	0	0	0	0	48
08:30 AM	0	16	0	0	16	1	0	0	0	1	0	14	1	0	15	0	0	0	0	0	32
08:45 AM	4	21	0	0	25	1	0	0	0	1	0	13	3	0	16	0	0	0	0	0	42
Total	6	64	0	0	70	4	0	1	0	5	0	74	14	0	88	0	0	0	0	0	163
09:00 AM	0	20	0	0	20	0	0	1	0	1	0	22	1	0	23	0	0	0	0	0	44
09:15 AM	1	16	0	0	17	2	0	0	0	2	0	17	0	0	17	0	0	0	0	0	36
Grand Total	15	150	1	0	166	9	0	2	0	11	0	203	22	0	225	0	0	0	0	0	402
Apprch %	9	90.4	0.6	0		81.8	0	18.2	0		0	90.2	9.8	0		0	0	0	0		
Total %	3.7	37.3	0.2	0	41.3	2.2	0	0.5	0	2.7	0	50.5	5.5	0	56	0	0	0	0	0	

	N. Glebe Rd Southbound				US 50 WB Off Westbound				N Glebe Rd Northbound				US 50 WB On Eastbound				
Start Time	Right	Thru	Left	App. Total	Right	Thru	Left	App. Total	Right	Thru	Left	App. Total	Right	Thru	Left	App. Total	Int. Total
Peak Hour Analysis From 06:30 AM to 09:15 AM - Peak 1 of 1																	
Peak Hour for Entire Intersection Begins at 08:15 AM																	
08:15 AM	0	**21**	0	21	0	0	0	0	0	21	**6**	**27**	0	0	0	0	**48**
08:30 AM	0	16	0	16	**1**	0	0	**1**	0	14	1	15	0	0	0	0	32
08:45 AM	**4**	21	0	**25**	1	0	0	1	0	13	3	16	0	0	0	0	42
09:00 AM	0	20	0	20	0	0	**1**	1	0	**22**	1	23	0	0	0	0	44
Total Volume	4	78	0	82	2	0	1	3	0	70	11	81	0	0	0	0	166
% App. Total	4.9	95.1	0		66.7	0	33.3		0	86.4	13.6		0	0	0		
PHF	.250	.929	.000	.820	.500	.000	.250	.750	.000	.795	.458	.750	.000	.000	.000	.000	.865

Peggy Malone & Associates, Inc.

(888) 247-8602

File Name : 1-N Glebe Rd and US 50 WB Ramps AM
Site Code :
Start Date : 5/29/2019
Page No : 1

Groups Printed- Bicycles on Crosswalk

	N. Glebe Rd Southbound					US 50 WB Off Westbound					N Glebe Rd Northbound					US 50 WB On Eastbound					
Start Time	Right	Thru	Left	Peds	App. Total	Right	Thru	Left	Peds	App. Total	Right	Thru	Left	Peds	App. Total	Right	Thru	Left	Peds	App. Total	Int. Total
06:30 AM	0	0	0	0	0	0	0	0	0	0	0	0	0	0	0	0	0	0	1	1	1
06:45 AM	0	0	0	1	1	0	0	0	2	2	0	0	0	0	0	0	0	0	1	1	4
Total	0	0	0	1	1	0	0	0	2	2	0	0	0	0	0	0	0	0	2	2	5
07:00 AM	0	0	0	0	0	0	0	0	2	2	0	0	0	0	0	0	0	0	0	0	2
07:15 AM	0	0	0	1	1	0	0	0	1	1	0	0	0	0	0	0	0	0	0	0	2
07:30 AM	0	0	0	0	0	0	0	0	0	0	0	0	0	0	0	0	0	0	0	0	0
07:45 AM	0	0	0	5	5	0	0	0	9	9	0	0	0	0	0	0	0	0	0	0	14
Total	0	0	0	6	6	0	0	0	12	12	0	0	0	0	0	0	0	0	0	0	18
08:00 AM	0	0	0	0	0	0	0	0	0	0	0	0	0	0	0	0	0	0	0	0	0
08:15 AM	0	0	0	0	0	0	0	0	4	4	0	0	0	0	0	0	0	0	0	0	4
08:30 AM	0	0	0	0	0	0	0	0	2	2	0	0	0	0	0	0	0	0	0	0	2
08:45 AM	0	0	0	0	0	0	0	0	0	0	0	0	0	0	0	0	0	0	0	0	0
Total	0	0	0	0	0	0	0	0	6	6	0	0	0	0	0	0	0	0	0	0	6
09:00 AM	0	0	0	0	0	0	0	0	0	0	0	0	0	0	0	0	0	0	0	0	0
09:15 AM	0	0	0	0	0	0	0	0	0	0	0	0	0	0	0	0	0	0	1	1	1
Grand Total	0	0	0	7	7	0	0	0	20	20	0	0	0	0	0	0	0	0	3	3	30
Apprch %	0	0	0	100		0	0	0	100		0	0	0	0		0	0	0	100		
Total %	0	0	0	23.3	23.3	0	0	0	66.7	66.7	0	0	0	0	0	0	0	0	10	10	

	N. Glebe Rd Southbound				US 50 WB Off Westbound				N Glebe Rd Northbound				US 50 WB On Eastbound				
Start Time	Right	Thru	Left	App. Total	Right	Thru	Left	App. Total	Right	Thru	Left	App. Total	Right	Thru	Left	App. Total	Int. Total
Peak Hour Analysis From 06:30 AM to 09:15 AM - Peak 1 of 1																	
Peak Hour for Entire Intersection Begins at 06:30 AM																	
06:30 AM	0	0	0	0	0	0	0	0	0	0	0	0	0	0	0	0	0
06:45 AM	0	0	0	0	0	0	0	0	0	0	0	0	0	0	0	0	0
07:00 AM	0	0	0	0	0	0	0	0	0	0	0	0	0	0	0	0	0
07:15 AM	0	0	0	0	0	0	0	0	0	0	0	0	0	0	0	0	0
Total Volume	0	0	0	0	0	0	0	0	0	0	0	0	0	0	0	0	0
% App. Total	0	0	0		0	0	0		0	0	0		0	0	0		
PHF	.000	.000	.000	.000	.000	.000	.000	.000	.000	.000	.000	.000	.000	.000	.000	.000	.000

Peggy Malone & Associates, Inc.

(888) 247-8602

File Name : 1-N Glebe Rd and US 50 WB Ramps AM
Site Code :
Start Date : 5/29/2019
Page No : 1

Groups Printed- Combined

	N. Glebe Rd Southbound					US 50 WB Off Westbound					N Glebe Rd Northbound					US 50 WB On Eastbound					
Start Time	Right	Thru	Left	Peds	App. Total	Right	Thru	Left	Peds	App. Total	Right	Thru	Left	Peds	App. Total	Right	Thru	Left	Peds	App. Total	Int. Total
06:30 AM	18	90	0	0	108	34	1	6	1	42	0	218	45	0	263	0	0	0	2	2	415
06:45 AM	20	103	0	2	125	44	2	7	6	59	0	283	49	0	332	0	0	0	1	1	517
Total	38	193	0	2	233	78	3	13	7	101	0	501	94	0	595	0	0	0	3	3	932
07:00 AM	26	142	0	2	170	42	0	9	9	60	0	298	71	0	369	0	0	0	5	5	604
07:15 AM	29	166	0	1	196	42	0	7	6	55	0	311	94	0	405	0	0	0	1	1	657
07:30 AM	25	162	0	0	187	29	1	5	9	44	0	323	94	0	417	0	0	0	3	3	651
07:45 AM	40	235	1	5	281	44	1	8	11	64	0	332	108	0	440	0	0	0	4	4	789
Total	120	705	1	8	834	157	2	29	35	223	0	1264	367	0	1631	0	0	0	13	13	2701
08:00 AM	34	180	0	0	214	48	0	10	3	61	0	328	118	0	446	0	0	0	1	1	722
08:15 AM	29	194	0	2	225	29	2	13	11	55	0	318	92	0	410	0	0	0	0	0	690
08:30 AM	20	181	0	0	201	45	1	14	6	66	0	281	91	0	372	0	0	0	0	0	639
08:45 AM	35	191	1	2	229	50	5	9	7	71	0	365	85	0	450	0	0	0	1	1	751
Total	118	746	1	4	869	172	8	46	27	253	0	1292	386	0	1678	0	0	0	2	2	2802
09:00 AM	29	168	0	1	198	45	0	10	2	57	0	304	72	0	376	0	0	0	1	1	632
09:15 AM	38	145	0	0	183	48	0	11	0	59	0	270	67	0	337	0	0	0	2	2	581
Grand Total	343	1957	2	15	2317	500	13	109	71	693	0	3631	986	0	4617	0	0	0	21	21	7648
Apprch %	14.8	84.5	0.1	0.6		72.2	1.9	15.7	10.2		0	78.6	21.4	0		0	0	0	100		
Total %	4.5	25.6	0	0.2	30.3	6.5	0.2	1.4	0.9	9.1	0	47.5	12.9	0	60.4	0	0	0	0.3	0.3	

	N. Glebe Rd Southbound				US 50 WB Off Westbound				N Glebe Rd Northbound				US 50 WB On Eastbound				
Start Time	Right	Thru	Left	App. Total	Right	Thru	Left	App. Total	Right	Thru	Left	App. Total	Right	Thru	Left	App. Total	Int. Total
Peak Hour Analysis From 06:30 AM to 09:15 AM - Peak 1 of 1																	
Peak Hour for Entire Intersection Begins at 07:30 AM																	
07:30 AM	25	162	0	187	29	1	5	35	0	323	94	417	0	0	0	0	639
07:45 AM	**40**	**235**	**1**	**276**	44	1	8	53	0	**332**	108	440	0	0	0	0	**769**
08:00 AM	34	180	0	214	**48**	0	10	**58**	0	328	**118**	**446**	0	0	0	0	718
08:15 AM	29	194	0	223	29	**2**	**13**	44	0	318	92	410	0	0	0	0	677
Total Volume	128	771	1	900	150	4	36	190	0	1301	412	1713	0	0	0	0	2803
% App. Total	14.2	85.7	0.1		78.9	2.1	18.9		0	75.9	24.1		0	0	0		
PHF	.800	.820	.250	.815	.781	.500	.692	.819	.000	.980	.873	.960	.000	.000	.000	.000	.911

Peggy Malone & Associates, Inc.
(888) 247-8602

File Name : 1-N Glebe Rd and US 50 WB Ramps PM
Site Code :
Start Date : 5/29/2019
Page No : 1

Groups Printed- Car

	N. Glebe Rd Southbound					US 50 WB Off Westbound					N Glebe Rd Northbound					US 50 WB On Eastbound					
Start Time	Right	Thru	Left	Peds	App. Total	Right	Thru	Left	Peds	App. Total	Right	Thru	Left	Peds	App. Total	Right	Thru	Left	Peds	App. Total	Int. Total
03:30 PM	39	232	0	3	274	20	1	21	4	46	0	180	55	0	235	0	0	0	2	2	557
03:45 PM	38	247	1	0	286	35	1	17	4	57	0	200	78	0	278	0	0	0	1	1	622
Total	77	479	1	3	560	55	2	38	8	103	0	380	133	0	513	0	0	0	3	3	1179
04:00 PM	37	288	0	3	328	38	1	25	3	67	0	209	73	0	282	0	0	0	7	7	684
04:15 PM	35	279	0	0	314	26	0	14	5	45	0	205	70	0	275	0	0	0	3	3	637
04:30 PM	41	291	0	0	332	30	1	19	3	53	0	211	66	0	277	0	0	0	9	9	671
04:45 PM	32	355	0	1	388	17	0	27	2	46	0	222	82	0	304	0	0	0	6	6	744
Total	145	1213	0	4	1362	111	2	85	13	211	0	847	291	0	1138	0	0	0	25	25	2736
05:00 PM	37	295	0	3	335	25	0	27	4	56	0	218	102	0	320	0	0	0	4	4	715
05:15 PM	36	304	0	2	342	21	1	23	6	51	0	235	72	0	307	0	0	0	8	8	708
05:30 PM	37	303	0	4	344	22	2	27	9	60	0	231	81	0	312	0	0	0	8	8	724
05:45 PM	36	365	0	5	406	35	1	27	7	70	0	237	76	0	313	0	0	0	7	7	796
Total	146	1267	0	14	1427	103	4	104	26	237	0	921	331	0	1252	0	0	0	27	27	2943
06:00 PM	29	314	0	0	343	30	2	25	17	74	0	245	73	0	318	0	0	0	8	8	743
06:15 PM	33	311	0	3	347	26	3	25	6	60	0	200	63	0	263	0	0	0	5	5	675
Grand Total	430	3584	1	24	4039	325	13	277	70	685	0	2593	891	0	3484	0	0	0	68	68	8276
Apprch %	10.6	88.7	0	0.6		47.4	1.9	40.4	10.2		0	74.4	25.6	0		0	0	0	100		
Total %	5.2	43.3	0	0.3	48.8	3.9	0.2	3.3	0.8	8.3	0	31.3	10.8	0	42.1	0	0	0	0.8	0.8	

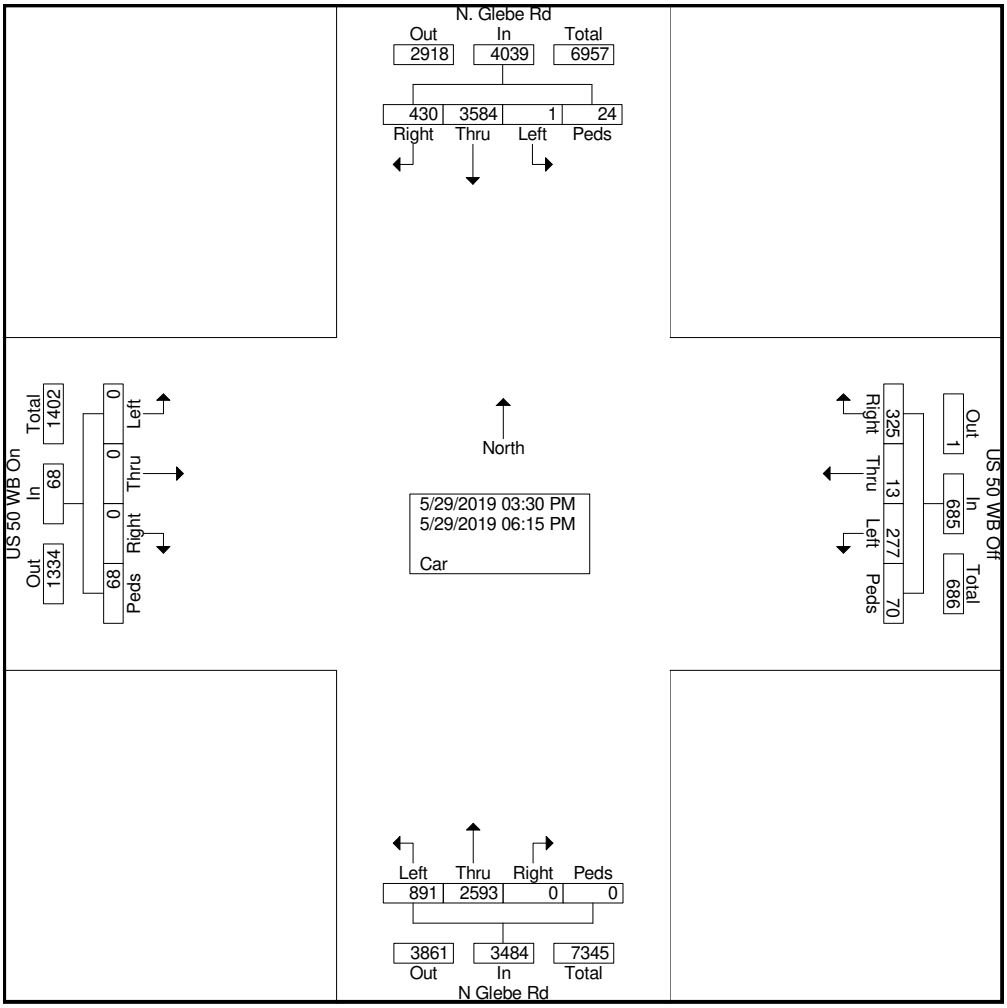

Peggy Malone & Associates, Inc.
(888) 247-8602

File Name : 1-N Glebe Rd and US 50 WB Ramps PM
Site Code :
Start Date : 5/29/2019
Page No : 1

Groups Printed- Truck

	N. Glebe Rd Southbound					US 50 WB Off Westbound					N Glebe Rd Northbound					US 50 WB On Eastbound					
Start Time	Right	Thru	Left	Peds	App. Total	Right	Thru	Left	Peds	App. Total	Right	Thru	Left	Peds	App. Total	Right	Thru	Left	Peds	App. Total	Int. Total
03:30 PM	0	9	0	0	9	2	0	0	0	2	0	15	1	0	16	0	0	0	0	0	27
03:45 PM	3	8	0	0	11	0	0	0	0	0	0	11	3	0	14	0	0	0	0	0	25
Total	3	17	0	0	20	2	0	0	0	2	0	26	4	0	30	0	0	0	0	0	52
04:00 PM	0	11	0	0	11	1	0	1	0	2	0	7	1	0	8	0	0	0	0	0	21
04:15 PM	2	7	0	0	9	0	0	0	0	0	0	9	2	0	11	0	0	0	0	0	20
04:30 PM	1	8	0	0	9	0	0	0	0	0	0	9	3	0	12	0	0	0	0	0	21
04:45 PM	0	10	0	0	10	1	0	0	0	1	0	7	1	0	8	0	0	0	0	0	19
Total	3	36	0	0	39	2	0	1	0	3	0	32	7	0	39	0	0	0	0	0	81
05:00 PM	2	5	0	0	7	0	0	2	0	2	0	4	2	0	6	0	0	0	0	0	15
05:15 PM	0	5	0	0	5	1	0	0	0	1	0	6	0	0	6	0	0	0	0	0	12
05:30 PM	0	12	0	0	12	1	0	0	0	1	0	4	0	0	4	0	0	0	0	0	17
05:45 PM	1	8	0	0	9	2	0	0	0	2	0	5	0	0	5	0	0	0	0	0	16
Total	3	30	0	0	33	4	0	2	0	6	0	19	2	0	21	0	0	0	0	0	60
06:00 PM	0	8	0	0	8	0	0	0	0	0	0	8	2	0	10	0	0	0	0	0	18
06:15 PM	0	7	0	0	7	0	0	0	0	0	0	8	3	0	11	0	0	0	0	0	18
Grand Total	9	98	0	0	107	8	0	3	0	11	0	93	18	0	111	0	0	0	0	0	229
Apprch %	8.4	91.6	0	0		72.7	0	27.3	0		0	83.8	16.2	0		0	0	0	0		
Total %	3.9	42.8	0	0	46.7	3.5	0	1.3	0	4.8	0	40.6	7.9	0	48.5	0	0	0	0	0	

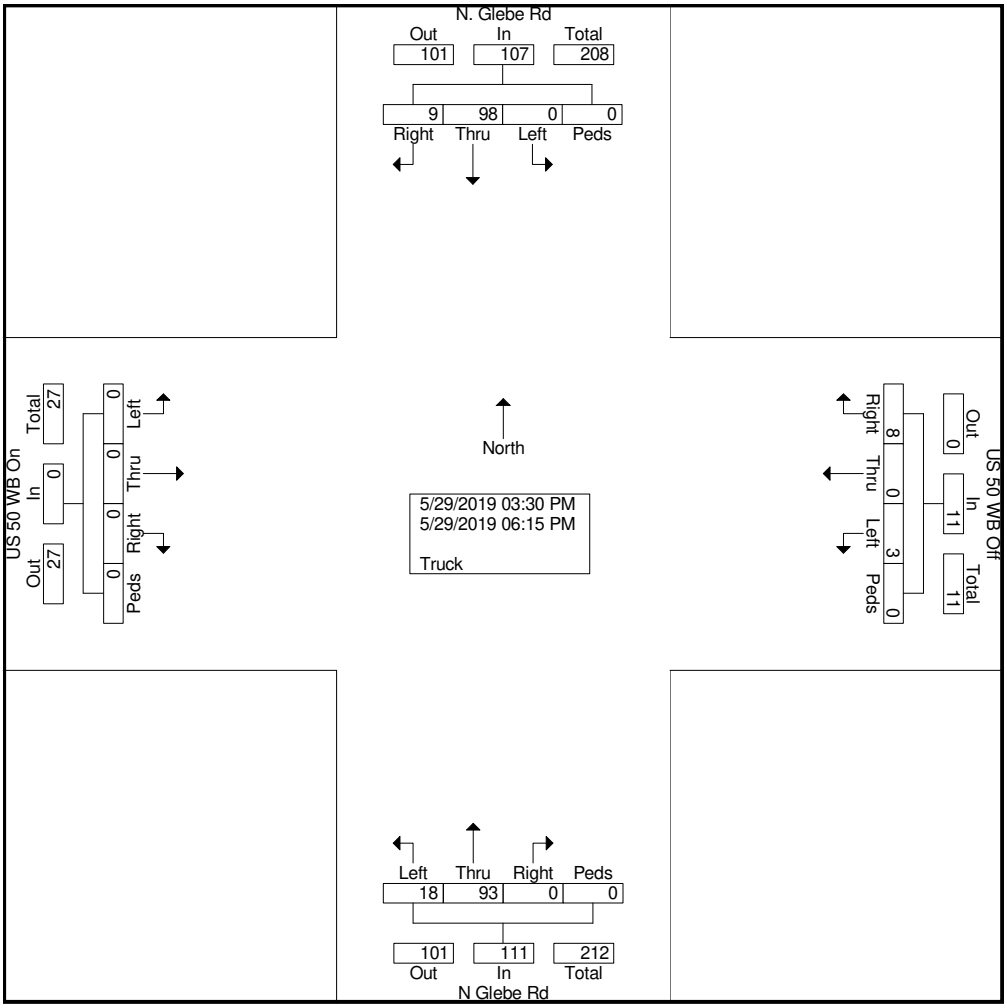

Peggy Malone & Associates, Inc.
(888) 247-8602

File Name : 1-N Glebe Rd and US 50 WB Ramps PM
Site Code :
Start Date : 5/29/2019
Page No : 1

Groups Printed- Bicycles on Crosswalk

	N. Glebe Rd Southbound					US 50 WB Off Westbound					N Glebe Rd Northbound					US 50 WB On Eastbound					
Start Time	Right	Thru	Left	Peds	App. Total	Right	Thru	Left	Peds	App. Total	Right	Thru	Left	Peds	App. Total	Right	Thru	Left	Peds	App. Total	Int. Total
03:30 PM	0	0	0	0	0	0	0	0	1	1	0	0	0	0	0	0	0	0	0	0	1
03:45 PM	0	0	0	1	1	0	0	0	2	2	0	0	0	0	0	0	0	0	0	0	3
Total	0	0	0	1	1	0	0	0	3	3	0	0	0	0	0	0	0	0	0	0	4
04:00 PM	0	0	0	0	0	0	0	0	4	4	0	0	0	0	0	0	0	0	0	0	4
04:15 PM	0	0	0	2	2	0	0	0	1	1	0	0	0	0	0	0	0	0	0	0	3
04:30 PM	0	0	0	1	1	0	0	0	1	1	0	0	0	0	0	0	0	0	0	0	2
04:45 PM	0	0	0	0	0	0	0	0	2	2	0	0	0	0	0	0	0	0	1	1	3
Total	0	0	0	3	3	0	0	0	8	8	0	0	0	0	0	0	0	0	1	1	12
05:00 PM	0	0	0	0	0	0	0	0	1	1	0	0	0	0	0	0	0	0	0	0	1
05:15 PM	0	0	0	0	0	0	0	0	1	1	0	0	0	0	0	0	0	0	1	1	2
05:30 PM	0	0	0	0	0	0	0	0	0	0	0	0	0	0	0	0	0	0	2	2	2
05:45 PM	0	0	0	0	0	0	0	0	1	1	0	0	0	0	0	0	0	0	0	0	1
Total	0	0	0	0	0	0	0	0	3	3	0	0	0	0	0	0	0	0	3	3	6
06:00 PM	0	0	0	0	0	0	0	0	2	2	0	0	0	0	0	0	0	0	0	0	2
06:15 PM	0	0	0	0	0	0	0	0	1	1	0	0	0	0	0	0	0	0	0	0	1
Grand Total	0	0	0	4	4	0	0	0	17	17	0	0	0	0	0	0	0	0	4	4	25
Apprch %	0	0	0	100		0	0	0	100		0	0	0	0		0	0	0	100		
Total %	0	0	0	16	16	0	0	0	68	68	0	0	0	0	0	0	0	0	16	16	

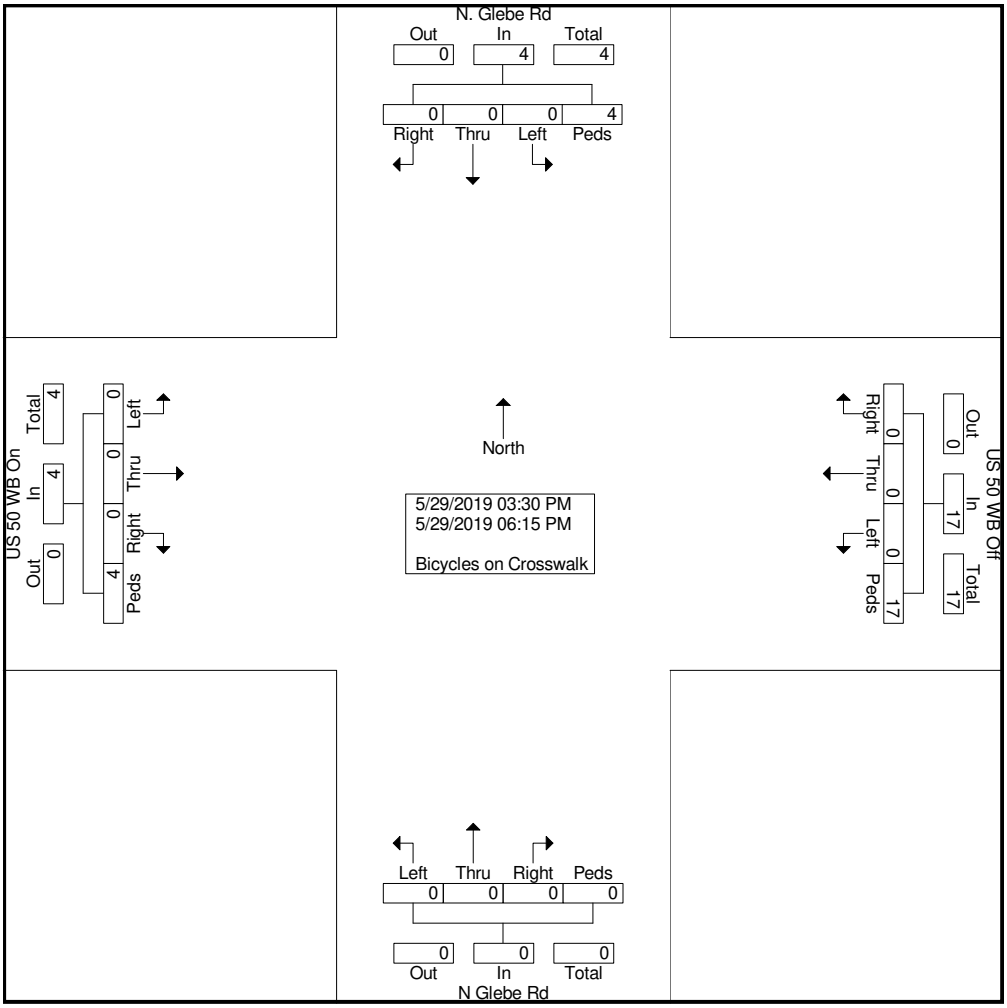

Peggy Malone & Associates, Inc.
(888) 247-8602

File Name : 1-N Glebe Rd and US 50 WB Ramps PM
Site Code :
Start Date : 5/29/2019
Page No : 1

Groups Printed- Combined

	N. Glebe Rd Southbound					US 50 WB Off Westbound					N Glebe Rd Northbound					US 50 WB On Eastbound					
Start Time	Right	Thru	Left	Peds	App. Total	Right	Thru	Left	Peds	App. Total	Right	Thru	Left	Peds	App. Total	Right	Thru	Left	Peds	App. Total	Int. Total
03:30 PM	39	241	0	3	283	22	1	21	5	49	0	195	56	0	251	0	0	0	2	2	585
03:45 PM	41	255	1	1	298	35	1	17	6	59	0	211	81	0	292	0	0	0	1	1	650
Total	80	496	1	4	581	57	2	38	11	108	0	406	137	0	543	0	0	0	3	3	1235
04:00 PM	37	299	0	3	339	39	1	26	7	73	0	216	74	0	290	0	0	0	7	7	709
04:15 PM	37	286	0	2	325	26	0	14	6	46	0	214	72	0	286	0	0	0	3	3	660
04:30 PM	42	299	0	1	342	30	1	19	4	54	0	220	69	0	289	0	0	0	9	9	694
04:45 PM	32	365	0	1	398	18	0	27	4	49	0	229	83	0	312	0	0	0	7	7	766
Total	148	1249	0	7	1404	113	2	86	21	222	0	879	298	0	1177	0	0	0	26	26	2829
05:00 PM	39	300	0	3	342	25	0	29	5	59	0	222	104	0	326	0	0	0	4	4	731
05:15 PM	36	309	0	2	347	22	1	23	7	53	0	241	72	0	313	0	0	0	9	9	722
05:30 PM	37	315	0	4	356	23	2	27	9	61	0	235	81	0	316	0	0	0	10	10	743
05:45 PM	37	373	0	5	415	37	1	27	8	73	0	242	76	0	318	0	0	0	7	7	813
Total	149	1297	0	14	1460	107	4	106	29	246	0	940	333	0	1273	0	0	0	30	30	3009
06:00 PM	29	322	0	0	351	30	2	25	19	76	0	253	75	0	328	0	0	0	8	8	763
06:15 PM	33	318	0	3	354	26	3	25	7	61	0	208	66	0	274	0	0	0	5	5	694
Grand Total	439	3682	1	28	4150	333	13	280	87	713	0	2686	909	0	3595	0	0	0	72	72	8530
Apprch %	10.6	88.7	0	0.7		46.7	1.8	39.3	12.2		0	74.7	25.3	0		0	0	0	100		
Total %	5.1	43.2	0	0.3	48.7	3.9	0.2	3.3	1	8.4	0	31.5	10.7	0	42.1	0	0	0	0.8	0.8	

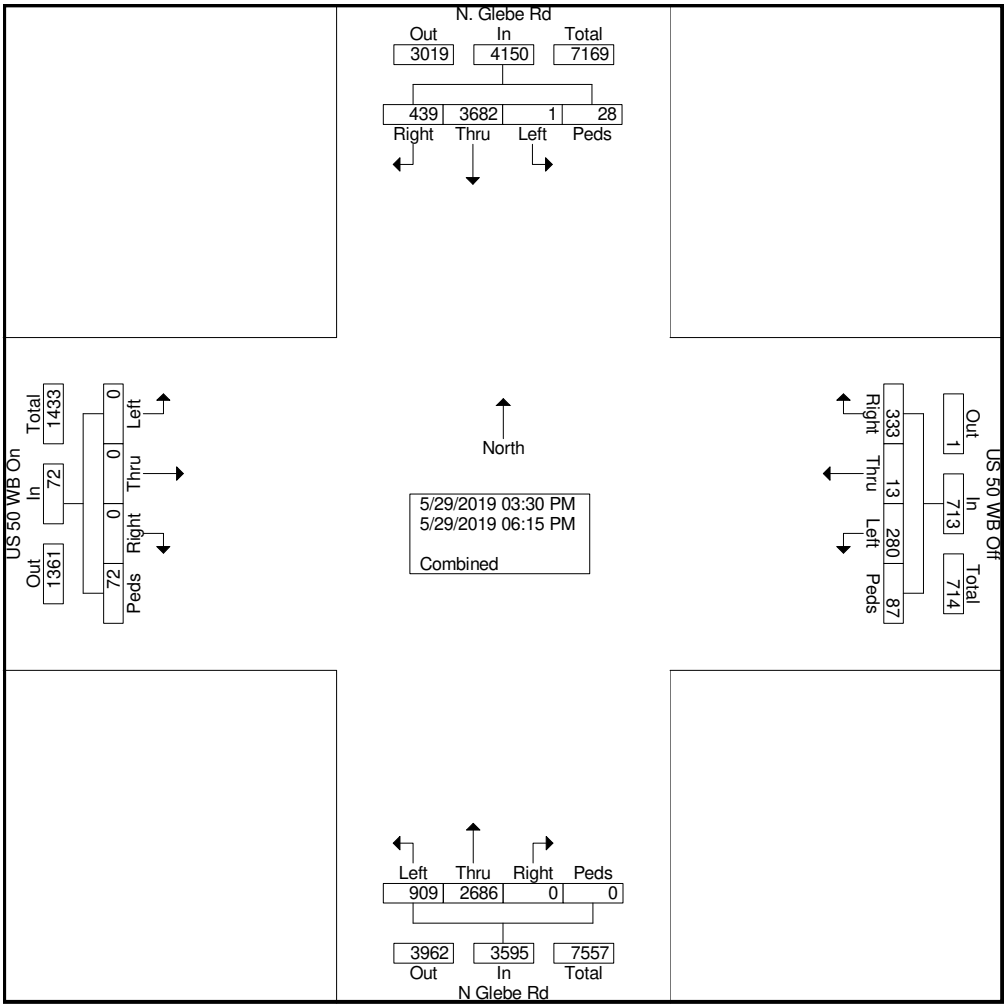

Peggy Malone & Associates, Inc.

(888) 247-8602

File Name : 2-N Glebe Rd and US 50 EB Ramps AM
Site Code :
Start Date : 5/29/2019
Page No : 1

Groups Printed- Car

	Glebe Rd Southbound					US 50 EB On Westbound					Glebe Rd Northbound					US 50 EB On/Off Eastbound					
Start Time	Right	Thru	Left	Peds	App. Total	Right	Thru	Left	Peds	App. Total	Right	Thru	Left	Peds	App. Total	Right	Thru	Left	Peds	App. Total	Int. Total
06:30 AM	19	60	0	0	79	0	0	0	0	0	20	221	0	2	243	28	0	19	1	48	370
06:45 AM	27	85	0	0	112	0	0	0	2	2	19	295	0	0	314	23	0	28	0	51	479
Total	46	145	0	0	191	0	0	0	2	2	39	516	0	2	557	51	0	47	1	99	849
07:00 AM	23	100	0	0	123	0	0	0	7	7	21	319	0	0	340	46	0	12	4	62	532
07:15 AM	40	139	0	0	179	0	1	0	7	8	26	376	0	1	403	42	1	20	2	65	655
07:30 AM	30	122	0	0	152	0	0	1	8	9	31	348	0	2	381	74	0	30	3	107	649
07:45 AM	42	190	0	1	233	0	0	0	6	6	25	415	0	2	442	54	0	20	2	76	757
Total	135	551	0	1	687	0	1	1	28	30	103	1458	0	5	1566	216	1	82	11	310	2593
08:00 AM	40	157	0	0	197	0	0	1	4	5	21	396	0	0	417	64	0	22	1	87	706
08:15 AM	31	150	0	0	181	0	0	0	10	10	21	375	0	3	399	51	0	18	2	71	661
08:30 AM	26	155	0	0	181	0	0	0	6	6	31	358	0	2	391	66	0	22	0	88	666
08:45 AM	23	157	0	0	180	0	0	0	7	7	28	378	0	4	410	73	0	36	1	110	707
Total	120	619	0	0	739	0	0	1	27	28	101	1507	0	9	1617	254	0	98	4	356	2740
09:00 AM	27	125	0	0	152	0	0	0	1	1	24	336	0	7	367	58	0	34	1	93	613
09:15 AM	25	116	0	0	141	0	0	0	0	0	15	293	0	1	309	43	0	23	2	68	518
Grand Total	353	1556	0	1	1910	0	1	2	58	61	282	4110	0	24	4416	622	1	284	19	926	7313
Apprch %	18.5	81.5	0	0.1		0	1.6	3.3	95.1		6.4	93.1	0	0.5		67.2	0.1	30.7	2.1		
Total %	4.8	21.3	0	0	26.1	0	0	0	0.8	0.8	3.9	56.2	0	0.3	60.4	8.5	0	3.9	0.3	12.7	

	Glebe Rd Southbound				US 50 EB On Westbound				Glebe Rd Northbound				US 50 EB On/Off Eastbound				
Start Time	Right	Thru	Left	App. Total	Right	Thru	Left	App. Total	Right	Thru	Left	App. Total	Right	Thru	Left	App. Total	Int. Total
Peak Hour Analysis From 06:30 AM to 09:15 AM - Peak 1 of 1																	
Peak Hour for Entire Intersection Begins at 07:45 AM																	
07:45 AM	**42**	**190**	0	**232**	0	0	0	0	25	**415**	0	**440**	54	0	20	74	**746**
08:00 AM	40	157	0	197	0	0	**1**	**1**	21	396	0	417	64	0	**22**	86	701
08:15 AM	31	150	0	181	0	0	0	0	21	375	0	396	51	0	18	69	646
08:30 AM	26	155	0	181	0	0	0	0	**31**	358	0	389	**66**	0	22	**88**	658
Total Volume	139	652	0	791	0	0	1	1	98	1544	0	1642	235	0	82	317	2751
% App. Total	17.6	82.4	0		0	0	100		6	94	0		74.1	0	25.9		
PHF	.827	.858	.000	.852	.000	.000	.250	.250	.790	.930	.000	.933	.890	.000	.932	.901	.922

Peggy Malone & Associates, Inc.

(888) 247-8602

File Name : 2-N Glebe Rd and US 50 EB Ramps AM
Site Code :
Start Date : 5/29/2019
Page No : 1

Groups Printed- Truck

	Glebe Rd Southbound					US 50 EB On Westbound					Glebe Rd Northbound					US 50 EB On/Off Eastbound					
Start Time	Right	Thru	Left	Peds	App. Total	Right	Thru	Left	Peds	App. Total	Right	Thru	Left	Peds	App. Total	Right	Thru	Left	Peds	App. Total	Int. Total
06:30 AM	0	6	0	0	6	0	0	0	0	0	0	11	0	0	11	1	0	0	0	1	18
06:45 AM	1	7	0	0	8	0	0	0	0	0	0	12	0	0	12	3	0	2	0	5	25
Total	1	13	0	0	14	0	0	0	0	0	0	23	0	0	23	4	0	2	0	6	43
07:00 AM	1	5	0	0	6	0	0	0	0	0	0	13	0	0	13	0	0	1	0	1	20
07:15 AM	0	10	0	0	10	0	0	0	0	0	0	14	0	0	14	3	0	1	0	4	28
07:30 AM	0	12	0	0	12	0	0	0	0	0	1	21	0	0	22	1	0	2	0	3	37
07:45 AM	1	8	0	0	9	0	0	0	0	0	0	16	0	0	16	1	0	0	0	1	26
Total	2	35	0	0	37	0	0	0	0	0	1	64	0	0	65	5	0	4	0	9	111
08:00 AM	0	6	0	0	6	0	0	0	0	0	1	29	0	0	30	2	0	1	0	3	39
08:15 AM	0	19	0	0	19	0	0	0	0	0	1	25	0	0	26	2	0	1	0	3	48
08:30 AM	2	17	0	0	19	0	0	0	0	0	0	16	0	0	16	1	0	0	0	1	36
08:45 AM	2	16	0	0	18	0	0	0	0	0	1	17	0	0	18	4	0	0	0	4	40
Total	4	58	0	0	62	0	0	0	0	0	3	87	0	0	90	9	0	2	0	11	163
09:00 AM	0	23	0	0	23	0	0	0	0	0	1	23	0	0	24	1	0	0	0	1	48
09:15 AM	0	16	0	0	16	0	0	0	0	0	1	18	0	0	19	1	0	0	0	1	36
Grand Total	7	145	0	0	152	0	0	0	0	0	6	215	0	0	221	20	0	8	0	28	401
Apprch %	4.6	95.4	0	0		0	0	0	0		2.7	97.3	0	0		71.4	0	28.6	0		
Total %	1.7	36.2	0	0	37.9	0	0	0	0	0	1.5	53.6	0	0	55.1	5	0	2	0	7	

	Glebe Rd Southbound				US 50 EB On Westbound				Glebe Rd Northbound				US 50 EB On/Off Eastbound				
Start Time	Right	Thru	Left	App. Total	Right	Thru	Left	App. Total	Right	Thru	Left	App. Total	Right	Thru	Left	App. Total	Int. Total
Peak Hour Analysis From 06:30 AM to 09:15 AM - Peak 1 of 1																	
Peak Hour for Entire Intersection Begins at 08:15 AM																	
08:15 AM	0	19	0	19	0	0	0	0	**1**	**25**	0	**26**	2	0	**1**	3	**48**
08:30 AM	**2**	17	0	19	0	0	0	0	0	16	0	16	1	0	0	1	36
08:45 AM	2	16	0	18	0	0	0	0	1	17	0	18	**4**	0	0	**4**	40
09:00 AM	0	**23**	0	**23**	0	0	0	0	1	23	0	24	1	0	0	1	48
Total Volume	4	75	0	79	0	0	0	0	3	81	0	84	8	0	1	9	172
% App. Total	5.1	94.9	0		0	0	0		3.6	96.4	0		88.9	0	11.1		
PHF	.500	.815	.000	.859	.000	.000	.000	.000	.750	.810	.000	.808	.500	.000	.250	.563	.896

Peggy Malone & Associates, Inc.

(888) 247-8602

File Name : 2-N Glebe Rd and US 50 EB Ramps AM
Site Code :
Start Date : 5/29/2019
Page No : 1

Groups Printed- Bicycles on Crosswalk

	Glebe Rd Southbound					US 50 EB On Westbound					Glebe Rd Northbound					US 50 EB On/Off Eastbound					
Start Time	Right	Thru	Left	Peds	App. Total	Right	Thru	Left	Peds	App. Total	Right	Thru	Left	Peds	App. Total	Right	Thru	Left	Peds	App. Total	Int. Total
06:30 AM	0	0	0	0	0	0	0	0	0	0	0	0	0	0	0	0	0	0	1	1	1
06:45 AM	0	0	0	0	0	0	0	0	0	0	0	0	0	1	1	0	0	0	1	1	2
Total	0	0	0	0	0	0	0	0	0	0	0	0	0	1	1	0	0	0	2	2	3
07:00 AM	0	0	0	0	0	0	0	0	1	1	0	0	0	2	2	0	0	0	0	0	3
07:15 AM	0	0	0	0	0	0	0	0	0	0	0	0	0	0	0	0	0	0	0	0	0
07:30 AM	0	0	0	0	0	0	0	0	1	1	0	0	0	1	1	0	0	0	1	1	3
07:45 AM	0	0	0	0	0	0	0	0	4	4	0	0	0	3	3	0	0	0	1	1	8
Total	0	0	0	0	0	0	0	0	6	6	0	0	0	6	6	0	0	0	2	2	14
08:00 AM	0	0	0	0	0	0	0	0	0	0	0	0	0	2	2	0	0	0	2	2	4
08:15 AM	0	0	0	0	0	0	0	0	2	2	0	0	0	3	3	0	0	0	1	1	6
08:30 AM	0	0	0	0	0	0	0	0	1	1	0	0	0	0	0	0	0	0	0	0	1
08:45 AM	0	0	0	0	0	0	0	0	0	0	0	0	0	0	0	0	0	0	0	0	0
Total	0	0	0	0	0	0	0	0	3	3	0	0	0	5	5	0	0	0	3	3	11
09:00 AM	0	0	0	0	0	0	0	0	0	0	0	0	0	0	0	0	0	0	0	0	0
09:15 AM	0	0	0	0	0	0	0	0	0	0	0	0	0	1	1	0	0	0	1	1	2
Grand Total	0	0	0	0	0	0	0	0	9	9	0	0	0	13	13	0	0	0	8	8	30
Apprch %	0	0	0	0		0	0	0	100		0	0	0	100		0	0	0	100		
Total %	0	0	0	0	0	0	0	0	30	30	0	0	0	43.3	43.3	0	0	0	26.7	26.7	

	Glebe Rd Southbound				US 50 EB On Westbound				Glebe Rd Northbound				US 50 EB On/Off Eastbound				
Start Time	Right	Thru	Left	App. Total	Right	Thru	Left	App. Total	Right	Thru	Left	App. Total	Right	Thru	Left	App. Total	Int. Total
Peak Hour Analysis From 06:30 AM to 09:15 AM - Peak 1 of 1																	
Peak Hour for Entire Intersection Begins at 06:30 AM																	
06:30 AM	0	0	0	0	0	0	0	0	0	0	0	0	0	0	0	0	0
06:45 AM	0	0	0	0	0	0	0	0	0	0	0	0	0	0	0	0	0
07:00 AM	0	0	0	0	0	0	0	0	0	0	0	0	0	0	0	0	0
07:15 AM	0	0	0	0	0	0	0	0	0	0	0	0	0	0	0	0	0
Total Volume	0	0	0	0	0	0	0	0	0	0	0	0	0	0	0	0	0
% App. Total	0	0	0		0	0	0		0	0	0		0	0	0		
PHF	.000	.000	.000	.000	.000	.000	.000	.000	.000	.000	.000	.000	.000	.000	.000	.000	.000

Peggy Malone & Associates, Inc.

(888) 247-8602

File Name : 2-N Glebe Rd and US 50 EB Ramps AM
Site Code :
Start Date : 5/29/2019
Page No : 1

Groups Printed- Combined

	Glebe Rd Southbound					US 50 EB On Westbound					Glebe Rd Northbound					US 50 EB On/Off Eastbound					
Start Time	Right	Thru	Left	Peds	App. Total	Right	Thru	Left	Peds	App. Total	Right	Thru	Left	Peds	App. Total	Right	Thru	Left	Peds	App. Total	Int. Total
06:30 AM	19	66	0	0	85	0	0	0	0	0	20	232	0	2	254	29	0	19	2	50	389
06:45 AM	28	92	0	0	120	0	0	0	2	2	19	307	0	1	327	26	0	30	1	57	506
Total	47	158	0	0	205	0	0	0	2	2	39	539	0	3	581	55	0	49	3	107	895
07:00 AM	24	105	0	0	129	0	0	0	8	8	21	332	0	2	355	46	0	13	4	63	555
07:15 AM	40	149	0	0	189	0	1	0	7	8	26	390	0	1	417	45	1	21	2	69	683
07:30 AM	30	134	0	0	164	0	0	1	9	10	32	369	0	3	404	75	0	32	4	111	689
07:45 AM	43	198	0	1	242	0	0	0	10	10	25	431	0	5	461	55	0	20	3	78	791
Total	137	586	0	1	724	0	1	1	34	36	104	1522	0	11	1637	221	1	86	13	321	2718
08:00 AM	40	163	0	0	203	0	0	1	4	5	22	425	0	2	449	66	0	23	3	92	749
08:15 AM	31	169	0	0	200	0	0	0	12	12	22	400	0	6	428	53	0	19	3	75	715
08:30 AM	28	172	0	0	200	0	0	0	7	7	31	374	0	2	407	67	0	22	0	89	703
08:45 AM	25	173	0	0	198	0	0	0	7	7	29	395	0	4	428	77	0	36	1	114	747
Total	124	677	0	0	801	0	0	1	30	31	104	1594	0	14	1712	263	0	100	7	370	2914
09:00 AM	27	148	0	0	175	0	0	0	1	1	25	359	0	7	391	59	0	34	1	94	661
09:15 AM	25	132	0	0	157	0	0	0	0	0	16	311	0	2	329	44	0	23	3	70	556
Grand Total	360	1701	0	1	2062	0	1	2	67	70	288	4325	0	37	4650	642	1	292	27	962	7744
Apprch %	17.5	82.5	0	0		0	1.4	2.9	95.7		6.2	93	0	0.8		66.7	0.1	30.4	2.8		
Total %	4.6	22	0	0	26.6	0	0	0	0.9	0.9	3.7	55.8	0	0.5	60	8.3	0	3.8	0.3	12.4	

	Glebe Rd Southbound				US 50 EB On Westbound				Glebe Rd Northbound				US 50 EB On/Off Eastbound				
Start Time	Right	Thru	Left	App. Total	Right	Thru	Left	App. Total	Right	Thru	Left	App. Total	Right	Thru	Left	App. Total	Int. Total
Peak Hour Analysis From 06:30 AM to 09:15 AM - Peak 1 of 1																	
Peak Hour for Entire Intersection Begins at 07:45 AM																	
07:45 AM	**43**	**198**	0	**241**	0	0	0	0	25	**431**	0	**456**	55	0	20	75	**772**
08:00 AM	40	163	0	203	0	0	**1**	**1**	22	425	0	447	66	0	**23**	**89**	740
08:15 AM	31	169	0	200	0	0	0	0	22	400	0	422	53	0	19	72	694
08:30 AM	28	172	0	200	0	0	0	0	**31**	374	0	405	**67**	0	22	89	694
Total Volume	142	702	0	844	0	0	1	1	100	1630	0	1730	241	0	84	325	2900
% App. Total	16.8	83.2	0		0	0	100		5.8	94.2	0		74.2	0	25.8		
PHF	.826	.886	.000	.876	.000	.000	.250	.250	.806	.945	.000	.948	.899	.000	.913	.913	.939

Peggy Malone & Associates, Inc.

(888) 247-8602

File Name : 2-N Glebe Rd and US 50 EB Ramps PM
Site Code :
Start Date : 5/29/2019
Page No : 1

Groups Printed- Car

	Glebe Rd Southbound					US 50 EB On Westbound					Glebe Rd Northbound					US 50 EB On/Off Eastbound					
Start Time	Right	Thru	Left	Peds	App. Total	Right	Thru	Left	Peds	App. Total	Right	Thru	Left	Peds	App. Total	Right	Thru	Left	Peds	App. Total	Int. Total
03:30 PM	52	218	0	0	270	0	0	0	2	2	15	211	0	1	227	51	0	28	2	81	580
03:45 PM	60	211	0	0	271	0	0	0	4	4	17	250	1	2	270	52	0	42	1	95	640
Total	112	429	0	0	541	0	0	0	6	6	32	461	1	3	497	103	0	70	3	176	1220
04:00 PM	53	259	0	0	312	0	0	0	3	3	17	246	0	2	265	51	0	36	7	94	674
04:15 PM	49	266	0	0	315	0	0	0	0	0	21	220	0	3	244	74	0	59	3	136	695
04:30 PM	44	265	0	0	309	0	0	0	4	4	20	239	0	5	264	70	0	46	10	126	703
04:45 PM	40	332	0	0	372	0	0	0	3	3	14	252	0	4	270	72	0	54	6	132	777
Total	186	1122	0	0	1308	0	0	0	10	10	72	957	0	14	1043	267	0	195	26	488	2849
05:00 PM	50	280	0	0	330	0	0	0	6	6	26	285	0	2	313	69	0	30	4	103	752
05:15 PM	53	262	0	0	315	0	0	0	4	4	13	262	0	3	278	60	0	41	6	107	704
05:30 PM	49	274	0	0	323	0	0	0	9	9	21	264	0	2	287	63	0	35	5	103	722
05:45 PM	58	324	0	0	382	0	0	0	9	9	22	299	0	5	326	48	0	22	8	78	795
Total	210	1140	0	0	1350	0	0	0	28	28	82	1110	0	12	1204	240	0	128	23	391	2973
06:00 PM	53	280	0	0	333	0	0	0	15	15	18	266	0	10	294	72	0	44	8	124	766
06:15 PM	42	303	0	0	345	0	0	0	6	6	17	228	0	3	248	55	0	31	8	94	693
Grand Total	603	3274	0	0	3877	0	0	0	65	65	221	3022	1	42	3286	737	0	468	68	1273	8501
Apprch %	15.6	84.4	0	0		0	0	0	100		6.7	92	0	1.3		57.9	0	36.8	5.3		
Total %	7.1	38.5	0	0	45.6	0	0	0	0.8	0.8	2.6	35.5	0	0.5	38.7	8.7	0	5.5	0.8	15	

	Glebe Rd Southbound				US 50 EB On Westbound				Glebe Rd Northbound				US 50 EB On/Off Eastbound				
Start Time	Right	Thru	Left	App. Total	Right	Thru	Left	App. Total	Right	Thru	Left	App. Total	Right	Thru	Left	App. Total	Int. Total
Peak Hour Analysis From 03:30 PM to 06:15 PM - Peak 1 of 1																	
Peak Hour for Entire Intersection Begins at 05:00 PM																	
05:00 PM	50	280	0	330	0	0	0	0	**26**	285	0	311	**69**	0	30	99	740
05:15 PM	53	262	0	315	0	0	0	0	13	262	0	275	60	0	**41**	**101**	691
05:30 PM	49	274	0	323	0	0	0	0	21	264	0	285	63	0	35	98	706
05:45 PM	**58**	**324**	0	**382**	0	0	0	0	22	**299**	0	**321**	48	0	22	70	**773**
Total Volume	210	1140	0	1350	0	0	0	0	82	1110	0	1192	240	0	128	368	2910
% App. Total	15.6	84.4	0		0	0	0		6.9	93.1	0		65.2	0	34.8		
PHF	.905	.880	.000	.884	.000	.000	.000	.000	.788	.928	.000	.928	.870	.000	.780	.911	.941

Peggy Malone & Associates, Inc.

(888) 247-8602

File Name : 2-N Glebe Rd and US 50 EB Ramps PM
Site Code :
Start Date : 5/29/2019
Page No : 1

Groups Printed- Truck

	Glebe Rd Southbound					US 50 EB On Westbound					Glebe Rd Northbound					US 50 EB On/Off Eastbound					
Start Time	Right	Thru	Left	Peds	App. Total	Right	Thru	Left	Peds	App. Total	Right	Thru	Left	Peds	App. Total	Right	Thru	Left	Peds	App. Total	Int. Total
03:30 PM	0	9	0	0	9	0	0	0	0	0	0	18	0	0	18	1	0	0	0	1	28
03:45 PM	0	8	0	0	8	0	0	0	0	0	0	12	0	0	12	2	0	0	0	2	22
Total	0	17	0	0	17	0	0	0	0	0	0	30	0	0	30	3	0	0	0	3	50
04:00 PM	1	10	0	0	11	0	0	0	0	0	1	6	0	0	7	4	0	0	0	4	22
04:15 PM	2	7	0	0	9	0	0	0	0	0	0	10	0	0	10	2	0	2	0	4	23
04:30 PM	1	7	0	0	8	0	0	0	0	0	0	12	0	0	12	0	0	0	0	0	20
04:45 PM	1	9	0	0	10	0	0	0	0	0	0	8	0	0	8	1	0	0	0	1	19
Total	5	33	0	0	38	0	0	0	0	0	1	36	0	0	37	7	0	2	0	9	84
05:00 PM	0	5	0	0	5	0	0	0	0	0	0	6	0	0	6	0	0	0	0	0	11
05:15 PM	0	6	0	0	6	0	0	0	0	0	0	8	0	0	8	1	0	0	0	1	15
05:30 PM	0	11	0	0	11	0	0	0	0	0	0	5	0	0	5	0	0	0	0	0	16
05:45 PM	1	6	0	0	7	0	0	0	0	0	0	5	0	0	5	0	0	0	0	0	12
Total	1	28	0	0	29	0	0	0	0	0	0	24	0	0	24	1	0	0	0	1	54
06:00 PM	0	10	0	0	10	0	0	0	0	0	0	7	0	0	7	0	0	1	0	1	18
06:15 PM	0	7	0	0	7	0	0	0	0	0	0	11	0	0	11	0	0	0	0	0	18
Grand Total	6	95	0	0	101	0	0	0	0	0	1	108	0	0	109	11	0	3	0	14	224
Apprch %	5.9	94.1	0	0		0	0	0	0		0.9	99.1	0	0		78.6	0	21.4	0		
Total %	2.7	42.4	0	0	45.1	0	0	0	0	0	0.4	48.2	0	0	48.7	4.9	0	1.3	0	6.2	

	Glebe Rd Southbound				US 50 EB On Westbound				Glebe Rd Northbound				US 50 EB On/Off Eastbound				
Start Time	Right	Thru	Left	App. Total	Right	Thru	Left	App. Total	Right	Thru	Left	App. Total	Right	Thru	Left	App. Total	Int. Total
Peak Hour Analysis From 03:30 PM to 06:15 PM - Peak 1 of 1																	
Peak Hour for Entire Intersection Begins at 03:30 PM																	
03:30 PM	0	9	0	9	0	0	0	0	0	**18**	0	**18**	1	0	0	1	**28**
03:45 PM	0	8	0	8	0	0	0	0	0	12	0	12	2	0	0	2	22
04:00 PM	1	**10**	0	**11**	0	0	0	0	**1**	6	0	7	**4**	0	0	**4**	22
04:15 PM	**2**	7	0	9	0	0	0	0	0	10	0	10	2	0	**2**	4	23
Total Volume	3	34	0	37	0	0	0	0	1	46	0	47	9	0	2	11	95
% App. Total	8.1	91.9	0		0	0	0		2.1	97.9	0		81.8	0	18.2		
PHF	.375	.850	.000	.841	.000	.000	.000	.000	.250	.639	.000	.653	.563	.000	.250	.688	.848

Peggy Malone & Associates, Inc.

(888) 247-8602

File Name : 2-N Glebe Rd and US 50 EB Ramps PM
Site Code :
Start Date : 5/29/2019
Page No : 1

Groups Printed- Bicycles on Crosswalk

	Glebe Rd Southbound					US 50 EB On Westbound					Glebe Rd Northbound					US 50 EB On/Off Eastbound					
Start Time	Right	Thru	Left	Peds	App. Total	Right	Thru	Left	Peds	App. Total	Right	Thru	Left	Peds	App. Total	Right	Thru	Left	Peds	App. Total	Int. Total
03:30 PM	0	0	0	0	0	0	0	0	1	1	0	0	0	2	2	0	0	0	0	0	3
03:45 PM	0	0	0	0	0	0	0	0	2	2	0	0	0	1	1	0	0	0	0	0	3
Total	0	0	0	0	0	0	0	0	3	3	0	0	0	3	3	0	0	0	0	0	6
04:00 PM	0	0	0	0	0	0	0	0	4	4	0	0	0	4	4	0	0	0	0	0	8
04:15 PM	0	0	0	0	0	0	0	0	0	0	0	0	0	2	2	0	0	0	1	1	3
04:30 PM	0	0	0	0	0	0	0	0	0	0	0	0	0	0	0	0	0	0	1	1	1
04:45 PM	0	0	0	0	0	0	0	0	1	1	0	0	0	1	1	0	0	0	0	0	2
Total	0	0	0	0	0	0	0	0	5	5	0	0	0	7	7	0	0	0	2	2	14
05:00 PM	0	0	0	0	0	0	0	0	0	0	0	0	0	0	0	0	0	0	0	0	0
05:15 PM	0	0	0	0	0	0	0	0	1	1	0	0	0	1	1	0	0	0	2	2	4
05:30 PM	0	0	0	0	0	0	0	0	0	0	0	0	0	0	0	0	0	0	1	1	1
05:45 PM	0	0	0	0	0	0	0	0	0	0	0	0	0	0	0	0	0	0	0	0	0
Total	0	0	0	0	0	0	0	0	1	1	0	0	0	1	1	0	0	0	3	3	5
06:00 PM	0	0	0	0	0	0	0	0	4	4	0	0	0	0	0	0	0	0	0	0	4
06:15 PM	0	0	0	0	0	0	0	0	3	3	0	0	0	1	1	0	0	0	0	0	4
Grand Total	0	0	0	0	0	0	0	0	16	16	0	0	0	12	12	0	0	0	5	5	33
Apprch %	0	0	0	0		0	0	0	100		0	0	0	100		0	0	0	100		
Total %	0	0	0	0	0	0	0	0	48.5	48.5	0	0	0	36.4	36.4	0	0	0	15.2	15.2	

	Glebe Rd Southbound				US 50 EB On Westbound				Glebe Rd Northbound				US 50 EB On/Off Eastbound				
Start Time	Right	Thru	Left	App. Total	Right	Thru	Left	App. Total	Right	Thru	Left	App. Total	Right	Thru	Left	App. Total	Int. Total
Peak Hour Analysis From 03:30 PM to 06:15 PM - Peak 1 of 1																	
Peak Hour for Entire Intersection Begins at 03:30 PM																	
03:30 PM	0	0	0	0	0	0	0	0	0	0	0	0	0	0	0	0	0
03:45 PM	0	0	0	0	0	0	0	0	0	0	0	0	0	0	0	0	0
04:00 PM	0	0	0	0	0	0	0	0	0	0	0	0	0	0	0	0	0
04:15 PM	0	0	0	0	0	0	0	0	0	0	0	0	0	0	0	0	0
Total Volume	0	0	0	0	0	0	0	0	0	0	0	0	0	0	0	0	0
% App. Total	0	0	0		0	0	0		0	0	0		0	0	0		
PHF	.000	.000	.000	.000	.000	.000	.000	.000	.000	.000	.000	.000	.000	.000	.000	.000	.000

Peggy Malone & Associates, Inc.

(888) 247-8602

File Name : 2-N Glebe Rd and US 50 EB Ramps PM
Site Code :
Start Date : 5/29/2019
Page No : 1

Groups Printed- Combined

	Glebe Rd Southbound					US 50 EB On Westbound					Glebe Rd Northbound					US 50 EB On/Off Eastbound					
Start Time	Right	Thru	Left	Peds	App. Total	Right	Thru	Left	Peds	App. Total	Right	Thru	Left	Peds	App. Total	Right	Thru	Left	Peds	App. Total	Int. Total
03:30 PM	52	227	0	0	279	0	0	0	3	3	15	229	0	3	247	52	0	28	2	82	611
03:45 PM	60	219	0	0	279	0	0	0	6	6	17	262	1	3	283	54	0	42	1	97	665
Total	112	446	0	0	558	0	0	0	9	9	32	491	1	6	530	106	0	70	3	179	1276
04:00 PM	54	269	0	0	323	0	0	0	7	7	18	252	0	6	276	55	0	36	7	98	704
04:15 PM	51	273	0	0	324	0	0	0	0	0	21	230	0	5	256	76	0	61	4	141	721
04:30 PM	45	272	0	0	317	0	0	0	4	4	20	251	0	5	276	70	0	46	11	127	724
04:45 PM	41	341	0	0	382	0	0	0	4	4	14	260	0	5	279	73	0	54	6	133	798
Total	191	1155	0	0	1346	0	0	0	15	15	73	993	0	21	1087	274	0	197	28	499	2947
05:00 PM	50	285	0	0	335	0	0	0	6	6	26	291	0	2	319	69	0	30	4	103	763
05:15 PM	53	268	0	0	321	0	0	0	5	5	13	270	0	4	287	61	0	41	8	110	723
05:30 PM	49	285	0	0	334	0	0	0	9	9	21	269	0	2	292	63	0	35	6	104	739
05:45 PM	59	330	0	0	389	0	0	0	9	9	22	304	0	5	331	48	0	22	8	78	807
Total	211	1168	0	0	1379	0	0	0	29	29	82	1134	0	13	1229	241	0	128	26	395	3032
06:00 PM	53	290	0	0	343	0	0	0	19	19	18	273	0	10	301	72	0	45	8	125	788
06:15 PM	42	310	0	0	352	0	0	0	9	9	17	239	0	4	260	55	0	31	8	94	715
Grand Total	609	3369	0	0	3978	0	0	0	81	81	222	3130	1	54	3407	748	0	471	73	1292	8758
Apprch %	15.3	84.7	0	0		0	0	0	100		6.5	91.9	0	1.6		57.9	0	36.5	5.7		
Total %	7	38.5	0	0	45.4	0	0	0	0.9	0.9	2.5	35.7	0	0.6	38.9	8.5	0	5.4	0.8	14.8	

	Glebe Rd Southbound				US 50 EB On Westbound				Glebe Rd Northbound				US 50 EB On/Off Eastbound				
Start Time	Right	Thru	Left	App. Total	Right	Thru	Left	App. Total	Right	Thru	Left	App. Total	Right	Thru	Left	App. Total	Int. Total
Peak Hour Analysis From 03:30 PM to 06:15 PM - Peak 1 of 1																	
Peak Hour for Entire Intersection Begins at 05:00 PM																	
05:00 PM	50	285	0	335	0	0	0	0	**26**	291	0	317	**69**	0	30	99	751
05:15 PM	53	268	0	321	0	0	0	0	13	270	0	283	61	0	**41**	**102**	706
05:30 PM	49	285	0	334	0	0	0	0	21	269	0	290	63	0	35	98	722
05:45 PM	**59**	**330**	0	**389**	0	0	0	0	22	**304**	0	**326**	48	0	22	70	**785**
Total Volume	211	1168	0	1379	0	0	0	0	82	1134	0	1216	241	0	128	369	2964
% App. Total	15.3	84.7	0		0	0	0		6.7	93.3	0		65.3	0	34.7		
PHF	.894	.885	.000	.886	.000	.000	.000	.000	.788	.933	.000	.933	.873	.000	.780	.904	.944

Peggy Malone & Associates, Inc.
(888) 247-8602

File Name : 3-Old Glebe Rd and US 50 AM
Site Code :
Start Date : 5/29/2019
Page No : 1

Groups Printed- Car

	US 50 Westbound				Old Glebe Rd Northbound				US 50 Eastbound					
Start Time	Thru	Left	Peds	App. Total	Right	Left	Peds	App. Total	Right	Thru	Left	Peds	App. Total	Int. Total
06:30 AM	298	0	0	298	3	0	0	3	4	786	0	0	790	1091
06:45 AM	320	0	0	320	2	0	0	2	4	833	0	0	837	1159
Total	618	0	0	618	5	0	0	5	8	1619	0	0	1627	2250
07:00 AM	350	0	0	350	4	0	0	4	1	879	0	0	880	1234
07:15 AM	465	0	0	465	2	1	0	3	5	876	0	0	881	1349
07:30 AM	430	0	0	430	7	1	0	8	3	872	0	0	875	1313
07:45 AM	528	0	0	528	6	0	0	6	0	768	0	0	768	1302
Total	1773	0	0	1773	19	2	0	21	9	3395	0	0	3404	5198
08:00 AM	500	0	0	500	2	0	0	2	1	795	0	0	796	1298
08:15 AM	435	0	0	435	3	3	0	6	0	747	1	0	748	1189
08:30 AM	458	0	0	458	5	0	0	5	0	811	0	0	811	1274
08:45 AM	426	0	0	426	4	1	0	5	0	834	0	0	834	1265
Total	1819	0	0	1819	14	4	0	18	1	3187	1	0	3189	5026
09:00 AM	393	0	0	393	2	1	0	3	2	831	0	0	833	1229
09:15 AM	393	0	0	393	1	1	0	2	1	776	0	0	777	1172
Grand Total	4996	0	0	4996	41	8	0	49	21	9808	1	0	9830	14875
Apprch %	100	0	0		83.7	16.3	0		0.2	99.8	0	0		
Total %	33.6	0	0	33.6	0.3	0.1	0	0.3	0.1	65.9	0	0	66.1	

	US 50 Westbound			Old Glebe Rd Northbound			US 50 Eastbound				
Start Time	Thru	Left	App. Total	Right	Left	App. Total	Right	Thru	Left	App. Total	Int. Total
Peak Hour Analysis From 06:30 AM to 09:15 AM - Peak 1 of 1											
Peak Hour for Entire Intersection Begins at 07:15 AM											
07:15 AM	465	0	465	2	**1**	3	**5**	**876**	0	**881**	**1349**
07:30 AM	430	0	430	**7**	1	**8**	3	872	0	875	1313
07:45 AM	**528**	0	**528**	6	0	6	0	768	0	768	1302
08:00 AM	500	0	500	2	0	2	1	795	0	796	1298
Total Volume	1923	0	1923	17	2	19	9	3311	0	3320	5262
% App. Total	100	0		89.5	10.5		0.3	99.7	0		
PHF	.911	.000	.911	.607	.500	.594	.450	.945	.000	.942	.975

Peggy Malone & Associates, Inc.

(888) 247-8602

File Name : 3-Old Glebe Rd and US 50 AM
Site Code :
Start Date : 5/29/2019
Page No : 1

Groups Printed- Truck

	US 50 Westbound				Old Glebe Rd Northbound				US 50 Eastbound					
Start Time	Thru	Left	Peds	App. Total	Right	Left	Peds	App. Total	Right	Thru	Left	Peds	App. Total	Int. Total
06:30 AM	4	0	0	4	0	0	0	0	0	13	0	0	13	17
06:45 AM	4	0	0	4	0	0	0	0	0	12	0	0	12	16
Total	8	0	0	8	0	0	0	0	0	25	0	0	25	33
07:00 AM	10	0	0	10	0	0	0	0	1	8	0	0	9	19
07:15 AM	13	0	0	13	0	0	0	0	0	17	0	0	17	30
07:30 AM	14	0	0	14	1	0	0	1	0	13	0	0	13	28
07:45 AM	15	0	0	15	0	0	0	0	0	23	0	0	23	38
Total	52	0	0	52	1	0	0	1	1	61	0	0	62	115
08:00 AM	17	0	0	17	1	0	0	1	0	10	0	0	10	28
08:15 AM	9	0	0	9	0	0	0	0	0	11	0	0	11	20
08:30 AM	4	0	0	4	0	0	0	0	0	15	0	0	15	19
08:45 AM	12	0	0	12	0	0	0	0	0	15	0	0	15	27
Total	42	0	0	42	1	0	0	1	0	51	0	0	51	94
09:00 AM	13	0	0	13	0	0	0	0	0	9	0	0	9	22
09:15 AM	11	0	0	11	0	0	0	0	0	16	0	0	16	27
Grand Total	126	0	0	126	2	0	0	2	1	162	0	0	163	291
Apprch %	100	0	0		100	0	0		0.6	99.4	0	0		
Total %	43.3	0	0	43.3	0.7	0	0	0.7	0.3	55.7	0	0	56	

	US 50 Westbound			Old Glebe Rd Northbound			US 50 Eastbound				
Start Time	Thru	Left	App. Total	Right	Left	App. Total	Right	Thru	Left	App. Total	Int. Total
Peak Hour Analysis From 06:30 AM to 09:15 AM - Peak 1 of 1											
Peak Hour for Entire Intersection Begins at 07:15 AM											
07:15 AM	13	0	13	0	0	0	0	17	0	17	30
07:30 AM	14	0	14	**1**	0	**1**	0	13	0	13	28
07:45 AM	15	0	15	0	0	0	0	**23**	0	**23**	**38**
08:00 AM	**17**	0	**17**	1	0	1	0	10	0	10	28
Total Volume	59	0	59	2	0	2	0	63	0	63	124
% App. Total	100	0		100	0		0	100	0		
PHF	.868	.000	.868	.500	.000	.500	.000	.685	.000	.685	.816

Peggy Malone & Associates, Inc.
(888) 247-8602

File Name : 3-Old Glebe Rd and US 50 AM
Site Code :
Start Date : 5/29/2019
Page No : 1

Groups Printed- Bicycles on Crosswalk

	US 50 Westbound				Old Glebe Rd Northbound				US 50 Eastbound					
Start Time	Thru	Left	Peds	App. Total	Right	Left	Peds	App. Total	Right	Thru	Left	Peds	App. Total	Int. Total
06:30 AM	0	0	0	0	0	0	0	0	0	0	0	0	0	0
06:45 AM	0	0	0	0	0	0	0	0	0	0	0	0	0	0
Total	0	0	0	0	0	0	0	0	0	0	0	0	0	0
07:00 AM	0	0	0	0	0	0	0	0	0	0	0	0	0	0
07:15 AM	0	0	0	0	0	0	0	0	0	0	0	0	0	0
07:30 AM	0	0	0	0	0	0	0	0	0	0	0	0	0	0
07:45 AM	0	0	0	0	0	0	0	0	0	0	0	0	0	0
Total	0	0	0	0	0	0	0	0	0	0	0	0	0	0
08:00 AM	0	0	0	0	0	0	0	0	0	0	0	0	0	0
08:15 AM	0	0	0	0	0	0	0	0	0	0	0	0	0	0
08:30 AM	0	0	0	0	0	0	0	0	0	0	0	0	0	0
08:45 AM	0	0	0	0	0	0	0	0	0	0	0	0	0	0
Total	0	0	0	0	0	0	0	0	0	0	0	0	0	0
09:00 AM	0	0	0	0	0	0	0	0	0	0	0	0	0	0
09:15 AM	0	0	0	0	0	0	0	0	0	0	0	0	0	0
Grand Total	0	0	0	0	0	0	0	0	0	0	0	0	0	0
Apprch %	0	0	0		0	0	0		0	0	0	0		
Total %														

	US 50 Westbound			Old Glebe Rd Northbound			US 50 Eastbound				
Start Time	Thru	Left	App. Total	Right	Left	App. Total	Right	Thru	Left	App. Total	Int. Total
Peak Hour Analysis From 06:30 AM to 09:15 AM - Peak 1 of 1											
Peak Hour for Entire Intersection Begins at 06:30 AM											
06:30 AM	0	0	0	0	0	0	0	0	0	0	0
06:45 AM	0	0	0	0	0	0	0	0	0	0	0
07:00 AM	0	0	0	0	0	0	0	0	0	0	0
07:15 AM	0	0	0	0	0	0	0	0	0	0	0
Total Volume	0	0	0	0	0	0	0	0	0	0	0
% App. Total	0	0		0	0		0	0	0		
PHF	.000	.000	.000	.000	.000	.000	.000	.000	.000	.000	.000

Peggy Malone & Associates, Inc.

(888) 247-8602

File Name : 3-Old Glebe Rd and US 50 AM
Site Code :
Start Date : 5/29/2019
Page No : 1

Groups Printed- Combined

	US 50 Westbound				Old Glebe Rd Northbound				US 50 Eastbound					
Start Time	Thru	Left	Peds	App. Total	Right	Left	Peds	App. Total	Right	Thru	Left	Peds	App. Total	Int. Total
06:30 AM	302	0	0	302	3	0	0	3	4	799	0	0	803	1108
06:45 AM	324	0	0	324	2	0	0	2	4	845	0	0	849	1175
Total	626	0	0	626	5	0	0	5	8	1644	0	0	1652	2283
07:00 AM	360	0	0	360	4	0	0	4	2	887	0	0	889	1253
07:15 AM	478	0	0	478	2	1	0	3	5	893	0	0	898	1379
07:30 AM	444	0	0	444	8	1	0	9	3	885	0	0	888	1341
07:45 AM	543	0	0	543	6	0	0	6	0	791	0	0	791	1340
Total	1825	0	0	1825	20	2	0	22	10	3456	0	0	3466	5313
08:00 AM	517	0	0	517	3	0	0	3	1	805	0	0	806	1326
08:15 AM	444	0	0	444	3	3	0	6	0	758	1	0	759	1209
08:30 AM	462	0	0	462	5	0	0	5	0	826	0	0	826	1293
08:45 AM	438	0	0	438	4	1	0	5	0	849	0	0	849	1292
Total	1861	0	0	1861	15	4	0	19	1	3238	1	0	3240	5120
09:00 AM	406	0	0	406	2	1	0	3	2	840	0	0	842	1251
09:15 AM	404	0	0	404	1	1	0	2	1	792	0	0	793	1199
Grand Total	5122	0	0	5122	43	8	0	51	22	9970	1	0	9993	15166
Apprch %	100	0	0		84.3	15.7	0		0.2	99.8	0	0		
Total %	33.8	0	0	33.8	0.3	0.1	0	0.3	0.1	65.7	0	0	65.9	

	US 50 Westbound			Old Glebe Rd Northbound			US 50 Eastbound				
Start Time	Thru	Left	App. Total	Right	Left	App. Total	Right	Thru	Left	App. Total	Int. Total
Peak Hour Analysis From 06:30 AM to 09:15 AM - Peak 1 of 1											
Peak Hour for Entire Intersection Begins at 07:15 AM											
07:15 AM	478	0	478	2	**1**	3	**5**	**893**	0	**898**	**1379**
07:30 AM	444	0	444	**8**	1	**9**	3	885	0	888	1341
07:45 AM	**543**	0	**543**	6	0	6	0	791	0	791	1340
08:00 AM	517	0	517	3	0	3	1	805	0	806	1326
Total Volume	1982	0	1982	19	2	21	9	3374	0	3383	5386
% App. Total	100	0		90.5	9.5		0.3	99.7	0		
PHF	.913	.000	.913	.594	.500	.583	.450	.945	.000	.942	.976

Peggy Malone & Associates, Inc.

(888) 247-8602

File Name : 3-Old Glebe Rd and US 50 PM
Site Code :
Start Date : 5/29/2019
Page No : 1

Groups Printed- Car

	US 50 Westbound				Old Glebe Rd Northbound				US 50 Eastbound					
Start Time	Thru	Left	Peds	App. Total	Right	Left	Peds	App. Total	Right	Thru	Left	Peds	App. Total	Int. Total
03:30 PM	756	0	0	756	2	0	0	2	1	567	0	0	568	1326
03:45 PM	772	0	0	772	3	0	0	3	1	543	0	0	544	1319
Total	1528	0	0	1528	5	0	0	5	2	1110	0	0	1112	2645
04:00 PM	770	0	0	770	2	1	0	3	3	572	0	0	575	1348
04:15 PM	760	0	0	760	1	0	0	1	2	659	0	0	661	1422
04:30 PM	775	0	0	775	2	0	0	2	0	583	0	0	583	1360
04:45 PM	783	0	0	783	3	0	0	3	3	619	0	0	622	1408
Total	3088	0	0	3088	8	1	0	9	8	2433	0	0	2441	5538
05:00 PM	868	0	0	868	10	0	0	10	4	550	0	1	555	1433
05:15 PM	812	0	0	812	2	0	0	2	0	592	0	0	592	1406
05:30 PM	813	0	0	813	4	0	0	4	4	546	0	0	550	1367
05:45 PM	778	0	0	778	2	0	0	2	4	608	0	0	612	1392
Total	3271	0	0	3271	18	0	0	18	12	2296	0	1	2309	5598
06:00 PM	790	0	0	790	2	0	0	2	4	571	0	0	575	1367
06:15 PM	734	0	0	734	3	0	0	3	2	535	0	0	537	1274
Grand Total	9411	0	0	9411	36	1	0	37	28	6945	0	1	6974	16422
Apprch %	100	0	0		97.3	2.7	0		0.4	99.6	0	0		
Total %	57.3	0	0	57.3	0.2	0	0	0.2	0.2	42.3	0	0	42.5	

	US 50 Westbound			Old Glebe Rd Northbound			US 50 Eastbound				
Start Time	Thru	Left	App. Total	Right	Left	App. Total	Right	Thru	Left	App. Total	Int. Total
Peak Hour Analysis From 03:30 PM to 06:15 PM - Peak 1 of 1											
Peak Hour for Entire Intersection Begins at 04:15 PM											
04:15 PM	760	0	760	1	0	1	2	**659**	0	**661**	1422
04:30 PM	775	0	775	2	0	2	0	583	0	583	1360
04:45 PM	783	0	783	3	0	3	3	619	0	622	1408
05:00 PM	**868**	0	**868**	**10**	0	**10**	**4**	550	0	554	**1432**
Total Volume	3186	0	3186	16	0	16	9	2411	0	2420	5622
% App. Total	100	0		100	0		0.4	99.6	0		
PHF	.918	.000	.918	.400	.000	.400	.563	.915	.000	.915	.981

Peggy Malone & Associates, Inc.

(888) 247-8602

File Name : 3-Old Glebe Rd and US 50 PM
Site Code :
Start Date : 5/29/2019
Page No : 1

Groups Printed- Truck

	US 50 Westbound				Old Glebe Rd Northbound				US 50 Eastbound					
Start Time	Thru	Left	Peds	App. Total	Right	Left	Peds	App. Total	Right	Thru	Left	Peds	App. Total	Int. Total
03:30 PM	14	0	0	14	0	0	0	0	0	11	0	0	11	25
03:45 PM	14	0	0	14	0	0	0	0	0	10	0	0	10	24
Total	28	0	0	28	0	0	0	0	0	21	0	0	21	49
04:00 PM	17	0	0	17	0	0	0	0	0	13	0	0	13	30
04:15 PM	12	0	0	12	0	0	0	0	0	15	0	0	15	27
04:30 PM	4	0	0	4	0	0	0	0	0	15	0	0	15	19
04:45 PM	16	0	0	16	0	0	0	0	0	12	0	0	12	28
Total	49	0	0	49	0	0	0	0	0	55	0	0	55	104
05:00 PM	6	0	0	6	0	0	0	0	0	11	0	0	11	17
05:15 PM	6	0	0	6	0	0	0	0	0	9	0	0	9	15
05:30 PM	5	0	0	5	0	0	0	0	0	8	0	0	8	13
05:45 PM	7	0	0	7	0	0	0	0	0	12	0	0	12	19
Total	24	0	0	24	0	0	0	0	0	40	0	0	40	64
06:00 PM	6	0	0	6	0	0	0	0	0	9	0	0	9	15
06:15 PM	3	0	0	3	1	0	0	1	0	8	0	0	8	12
Grand Total	110	0	0	110	1	0	0	1	0	133	0	0	133	244
Apprch %	100	0	0		100	0	0		0	100	0	0		
Total %	45.1	0	0	45.1	0.4	0	0	0.4	0	54.5	0	0	54.5	

	US 50 Westbound			Old Glebe Rd Northbound			US 50 Eastbound				
Start Time	Thru	Left	App. Total	Right	Left	App. Total	Right	Thru	Left	App. Total	Int. Total
Peak Hour Analysis From 03:30 PM to 06:15 PM - Peak 1 of 1											
Peak Hour for Entire Intersection Begins at 03:30 PM											
03:30 PM	14	0	14	0	0	0	0	11	0	11	25
03:45 PM	14	0	14	0	0	0	0	10	0	10	24
04:00 PM	**17**	0	**17**	0	0	0	0	13	0	13	**30**
04:15 PM	12	0	12	0	0	0	0	**15**	0	**15**	27
Total Volume	57	0	57	0	0	0	0	49	0	49	106
% App. Total	100	0		0	0		0	100	0		
PHF	.838	.000	.838	.000	.000	.000	.000	.817	.000	.817	.883

Peggy Malone & Associates, Inc.
(888) 247-8602

File Name : 3-Old Glebe Rd and US 50 PM
Site Code :
Start Date : 5/29/2019
Page No : 1

Groups Printed- Bicycles on Crosswalk

	US 50 Westbound				Old Glebe Rd Northbound				US 50 Eastbound					
Start Time	Thru	Left	Peds	App. Total	Right	Left	Peds	App. Total	Right	Thru	Left	Peds	App. Total	Int. Total
03:30 PM	0	0	0	0	0	0	0	0	0	0	0	0	0	0
03:45 PM	0	0	0	0	0	0	0	0	0	0	0	0	0	0
Total	0	0	0	0	0	0	0	0	0	0	0	0	0	0
04:00 PM	0	0	0	0	0	0	0	0	0	0	0	0	0	0
04:15 PM	0	0	0	0	0	0	0	0	0	0	0	0	0	0
04:30 PM	0	0	0	0	0	0	0	0	0	0	0	0	0	0
04:45 PM	0	0	0	0	0	0	0	0	0	0	0	0	0	0
Total	0	0	0	0	0	0	0	0	0	0	0	0	0	0
05:00 PM	0	0	0	0	0	0	0	0	0	0	0	0	0	0
05:15 PM	0	0	0	0	0	0	0	0	0	0	0	0	0	0
05:30 PM	0	0	0	0	0	0	0	0	0	0	0	0	0	0
05:45 PM	0	0	0	0	0	0	0	0	0	0	0	0	0	0
Total	0	0	0	0	0	0	0	0	0	0	0	0	0	0
06:00 PM	0	0	0	0	0	0	0	0	0	0	0	0	0	0
06:15 PM	0	0	0	0	0	0	0	0	0	0	0	0	0	0
Grand Total	0	0	0	0	0	0	0	0	0	0	0	0	0	0
Apprch %	0	0	0		0	0	0		0	0	0	0		
Total %														

	US 50 Westbound			Old Glebe Rd Northbound			US 50 Eastbound				
Start Time	Thru	Left	App. Total	Right	Left	App. Total	Right	Thru	Left	App. Total	Int. Total
Peak Hour Analysis From 03:30 PM to 06:15 PM - Peak 1 of 1											
Peak Hour for Entire Intersection Begins at 03:30 PM											
03:30 PM	0	0	0	0	0	0	0	0	0	0	0
03:45 PM	0	0	0	0	0	0	0	0	0	0	0
04:00 PM	0	0	0	0	0	0	0	0	0	0	0
04:15 PM	0	0	0	0	0	0	0	0	0	0	0
Total Volume	0	0	0	0	0	0	0	0	0	0	0
% App. Total	0	0		0	0		0	0	0		
PHF	.000	.000	.000	.000	.000	.000	.000	.000	.000	.000	.000

Peggy Malone & Associates, Inc.

(888) 247-8602

File Name : 3-Old Glebe Rd and US 50 PM
Site Code :
Start Date : 5/29/2019
Page No : 1

Groups Printed- Combined

	US 50 Westbound				Old Glebe Rd Northbound				US 50 Eastbound					
Start Time	Thru	Left	Peds	App. Total	Right	Left	Peds	App. Total	Right	Thru	Left	Peds	App. Total	Int. Total
03:30 PM	770	0	0	770	2	0	0	2	1	578	0	0	579	1351
03:45 PM	786	0	0	786	3	0	0	3	1	553	0	0	554	1343
Total	1556	0	0	1556	5	0	0	5	2	1131	0	0	1133	2694
04:00 PM	787	0	0	787	2	1	0	3	3	585	0	0	588	1378
04:15 PM	772	0	0	772	1	0	0	1	2	674	0	0	676	1449
04:30 PM	779	0	0	779	2	0	0	2	0	598	0	0	598	1379
04:45 PM	799	0	0	799	3	0	0	3	3	631	0	0	634	1436
Total	3137	0	0	3137	8	1	0	9	8	2488	0	0	2496	5642
05:00 PM	874	0	0	874	10	0	0	10	4	561	0	1	566	1450
05:15 PM	818	0	0	818	2	0	0	2	0	601	0	0	601	1421
05:30 PM	818	0	0	818	4	0	0	4	4	554	0	0	558	1380
05:45 PM	785	0	0	785	2	0	0	2	4	620	0	0	624	1411
Total	3295	0	0	3295	18	0	0	18	12	2336	0	1	2349	5662
06:00 PM	796	0	0	796	2	0	0	2	4	580	0	0	584	1382
06:15 PM	737	0	0	737	4	0	0	4	2	543	0	0	545	1286
Grand Total	9521	0	0	9521	37	1	0	38	28	7078	0	1	7107	16666
Apprch %	100	0	0		97.4	2.6	0		0.4	99.6	0	0		
Total %	57.1	0	0	57.1	0.2	0	0	0.2	0.2	42.5	0	0	42.6	

	US 50 Westbound			Old Glebe Rd Northbound			US 50 Eastbound				
Start Time	Thru	Left	App. Total	Right	Left	App. Total	Right	Thru	Left	App. Total	Int. Total
Peak Hour Analysis From 03:30 PM to 06:15 PM - Peak 1 of 1											
Peak Hour for Entire Intersection Begins at 04:15 PM											
04:15 PM	772	0	772	1	0	1	2	**674**	0	**676**	**1449**
04:30 PM	779	0	779	2	0	2	0	598	0	598	1379
04:45 PM	799	0	799	3	0	3	3	631	0	634	1436
05:00 PM	**874**	0	**874**	**10**	0	**10**	**4**	561	0	565	1449
Total Volume	3224	0	3224	16	0	16	9	2464	0	2473	5713
% App. Total	100	0		100	0		0.4	99.6	0		
PHF	.922	.000	.922	.400	.000	.400	.563	.914	.000	.915	.986

Peggy Malone & Associates, Inc.

(888) 247-8602

File Name : 4-N Jackson St and US 50 AM
Site Code :
Start Date : 5/29/2019
Page No : 1

Groups Printed- Car

	N Jackson St Southbound				US 50 Westbound				US 50 Eastbound				
Start Time	Right	Left	Peds	App. Total	Right	Thru	Peds	App. Total	Thru	Left	Peds	App. Total	Int. Total
06:30 AM	2	0	0	2	1	0	0	1	0	4	0	4	7
06:45 AM	2	0	3	5	0	0	0	0	0	5	0	5	10
Total	4	0	3	7	1	0	0	1	0	9	0	9	17
07:00 AM	5	1	3	9	0	0	0	0	0	8	0	8	17
07:15 AM	5	0	3	8	3	0	0	3	0	9	0	9	20
07:30 AM	13	0	0	13	6	0	0	6	0	2	0	2	21
07:45 AM	3	0	1	4	2	0	0	2	0	6	0	6	12
Total	26	1	7	34	11	0	0	11	0	25	0	25	70
08:00 AM	7	0	1	8	0	0	0	0	0	8	0	8	16
08:15 AM	4	0	0	4	2	0	0	2	0	8	0	8	14
08:30 AM	7	0	1	8	1	0	0	1	0	6	0	6	15
08:45 AM	6	1	2	9	1	0	0	1	0	10	0	10	20
Total	24	1	4	29	4	0	0	4	0	32	0	32	65
09:00 AM	12	0	3	15	8	0	0	8	0	8	0	8	31
09:15 AM	19	0	5	24	5	0	0	5	0	7	0	7	36
Grand Total	85	2	22	109	29	0	0	29	0	81	0	81	219
Apprch %	78	1.8	20.2		100	0	0		0	100	0		
Total %	38.8	0.9	10	49.8	13.2	0	0	13.2	0	37	0	37	

	N Jackson St Southbound			US 50 Westbound			US 50 Eastbound			
Start Time	Right	Left	App. Total	Right	Thru	App. Total	Thru	Left	App. Total	Int. Total
Peak Hour Analysis From 06:30 AM to 09:15 AM - Peak 1 of 1										
Peak Hour for Entire Intersection Begins at 08:30 AM										
08:30 AM	7	0	7	1	0	1	0	6	6	14
08:45 AM	6	**1**	7	1	0	1	0	**10**	**10**	18
09:00 AM	12	0	12	**8**	0	**8**	0	8	8	28
09:15 AM	**19**	0	**19**	5	0	5	0	7	7	**31**
Total Volume	44	1	45	15	0	15	0	31	31	91
% App. Total	97.8	2.2		100	0		0	100		
PHF	.579	.250	.592	.469	.000	.469	.000	.775	.775	.734

Peggy Malone & Associates, Inc.
(888) 247-8602

File Name : 4-N Jackson St and US 50 AM
Site Code :
Start Date : 5/29/2019
Page No : 1

Groups Printed- Truck

	N Jackson St Southbound				US 50 Westbound				US 50 Eastbound				
Start Time	Right	Left	Peds	App. Total	Right	Thru	Peds	App. Total	Thru	Left	Peds	App. Total	Int. Total
06:30 AM	0	0	0	0	0	0	0	0	0	0	0	0	0
06:45 AM	0	0	0	0	0	0	0	0	0	0	0	0	0
Total	0	0	0	0	0	0	0	0	0	0	0	0	0
07:00 AM	0	0	0	0	0	0	0	0	0	0	0	0	0
07:15 AM	0	0	0	0	0	0	0	0	0	0	0	0	0
07:30 AM	0	0	0	0	0	0	0	0	0	0	0	0	0
07:45 AM	1	0	0	1	0	0	0	0	0	0	0	0	1
Total	1	0	0	1	0	0	0	0	0	0	0	0	1
08:00 AM	0	0	0	0	0	0	0	0	0	1	0	1	1
08:15 AM	0	0	0	0	0	0	0	0	0	0	0	0	0
08:30 AM	0	0	0	0	0	0	0	0	0	0	0	0	0
08:45 AM	0	0	0	0	0	0	0	0	0	0	0	0	0
Total	0	0	0	0	0	0	0	0	0	1	0	1	1
09:00 AM	0	0	0	0	1	0	0	1	0	0	0	0	1
09:15 AM	0	0	0	0	0	0	0	0	0	0	0	0	0
Grand Total	1	0	0	1	1	0	0	1	0	1	0	1	3
Apprch %	100	0	0		100	0	0		0	100	0		
Total %	33.3	0	0	33.3	33.3	0	0	33.3	0	33.3	0	33.3	

	N Jackson St Southbound			US 50 Westbound			US 50 Eastbound			
Start Time	Right	Left	App. Total	Right	Thru	App. Total	Thru	Left	App. Total	Int. Total
Peak Hour Analysis From 06:30 AM to 09:15 AM - Peak 1 of 1										
Peak Hour for Entire Intersection Begins at 07:15 AM										
07:15 AM	0	0	0	0	0	0	0	0	0	0
07:30 AM	0	0	0	0	0	0	0	0	0	0
07:45 AM	**1**	0	**1**	0	0	0	0	0	0	**1**
08:00 AM	0	0	0	0	0	0	0	**1**	**1**	1
Total Volume	1	0	1	0	0	0	0	1	1	2
% App. Total	100	0		0	0		0	100		
PHF	.250	.000	.250	.000	.000	.000	.000	.250	.250	.500

Peggy Malone & Associates, Inc.
(888) 247-8602

File Name : 4-N Jackson St and US 50 AM
Site Code :
Start Date : 5/29/2019
Page No : 1

Groups Printed- Bicycles on Crosswalk

	N Jackson St Southbound				US 50 Westbound				US 50 Eastbound				
Start Time	Right	Left	Peds	App. Total	Right	Thru	Peds	App. Total	Thru	Left	Peds	App. Total	Int. Total
06:30 AM	0	0	1	1	0	0	0	0	0	0	0	0	1
06:45 AM	0	0	1	1	0	0	0	0	0	0	0	0	1
Total	0	0	2	2	0	0	0	0	0	0	0	0	2
07:00 AM	0	0	1	1	0	0	0	0	0	0	0	0	1
07:15 AM	0	0	3	3	0	0	0	0	0	0	0	0	3
07:30 AM	0	0	4	4	0	0	0	0	0	0	0	0	4
07:45 AM	0	0	1	1	0	0	0	0	0	0	0	0	1
Total	0	0	9	9	0	0	0	0	0	0	0	0	9
08:00 AM	0	0	1	1	0	0	0	0	0	0	0	0	1
08:15 AM	0	0	2	2	0	0	0	0	0	0	0	0	2
08:30 AM	0	0	0	0	0	0	0	0	0	0	0	0	0
08:45 AM	0	0	0	0	0	0	0	0	0	0	0	0	0
Total	0	0	3	3	0	0	0	0	0	0	0	0	3
09:00 AM	0	0	0	0	0	0	0	0	0	0	0	0	0
09:15 AM	0	0	0	0	0	0	0	0	0	0	0	0	0
Grand Total	0	0	14	14	0	0	0	0	0	0	0	0	14
Apprch %	0	0	100		0	0	0		0	0	0		
Total %	0	0	100	100	0	0	0	0	0	0	0	0	

	N Jackson St Southbound			US 50 Westbound			US 50 Eastbound			
Start Time	Right	Left	App. Total	Right	Thru	App. Total	Thru	Left	App. Total	Int. Total
Peak Hour Analysis From 06:30 AM to 09:15 AM - Peak 1 of 1										
Peak Hour for Entire Intersection Begins at 06:30 AM										
06:30 AM	0	0	0	0	0	0	0	0	0	0
06:45 AM	0	0	0	0	0	0	0	0	0	0
07:00 AM	0	0	0	0	0	0	0	0	0	0
07:15 AM	0	0	0	0	0	0	0	0	0	0
Total Volume	0	0	0	0	0	0	0	0	0	0
% App. Total	0	0		0	0		0	0		
PHF	.000	.000	.000	.000	.000	.000	.000	.000	.000	.000

Peggy Malone & Associates, Inc.

(888) 247-8602

File Name : 4-N Jackson St and US 50 AM
Site Code :
Start Date : 5/29/2019
Page No : 1

Groups Printed- Combined

	N Jackson St Southbound				US 50 Westbound				US 50 Eastbound				
Start Time	Right	Left	Peds	App. Total	Right	Thru	Peds	App. Total	Thru	Left	Peds	App. Total	Int. Total
06:30 AM	2	0	1	3	1	0	0	1	0	4	0	4	8
06:45 AM	2	0	4	6	0	0	0	0	0	5	0	5	11
Total	4	0	5	9	1	0	0	1	0	9	0	9	19
07:00 AM	5	1	4	10	0	0	0	0	0	8	0	8	18
07:15 AM	5	0	6	11	3	0	0	3	0	9	0	9	23
07:30 AM	13	0	4	17	6	0	0	6	0	2	0	2	25
07:45 AM	4	0	2	6	2	0	0	2	0	6	0	6	14
Total	27	1	16	44	11	0	0	11	0	25	0	25	80
08:00 AM	7	0	2	9	0	0	0	0	0	9	0	9	18
08:15 AM	4	0	2	6	2	0	0	2	0	8	0	8	16
08:30 AM	7	0	1	8	1	0	0	1	0	6	0	6	15
08:45 AM	6	1	2	9	1	0	0	1	0	10	0	10	20
Total	24	1	7	32	4	0	0	4	0	33	0	33	69
09:00 AM	12	0	3	15	9	0	0	9	0	8	0	8	32
09:15 AM	19	0	5	24	5	0	0	5	0	7	0	7	36
Grand Total	86	2	36	124	30	0	0	30	0	82	0	82	236
Apprch %	69.4	1.6	29		100	0	0		0	100	0		
Total %	36.4	0.8	15.3	52.5	12.7	0	0	12.7	0	34.7	0	34.7	

	N Jackson St Southbound			US 50 Westbound			US 50 Eastbound			
Start Time	Right	Left	App. Total	Right	Thru	App. Total	Thru	Left	App. Total	Int. Total
Peak Hour Analysis From 06:30 AM to 09:15 AM - Peak 1 of 1										
Peak Hour for Entire Intersection Begins at 08:30 AM										
08:30 AM	7	0	7	1	0	1	0	6	6	14
08:45 AM	6	**1**	7	1	0	1	0	**10**	**10**	18
09:00 AM	12	0	12	**9**	0	**9**	0	8	8	29
09:15 AM	**19**	0	**19**	5	0	5	0	7	7	**31**
Total Volume	44	1	45	16	0	16	0	31	31	92
% App. Total	97.8	2.2		100	0		0	100		
PHF	.579	.250	.592	.444	.000	.444	.000	.775	.775	.742

Peggy Malone & Associates, Inc.

(888) 247-8602

File Name : 4-N Jackson St and US 50 PM
Site Code :
Start Date : 5/29/2019
Page No : 1

Groups Printed- Car

	N Jackson St Southbound				US 50 Westbound				US 50 Eastbound				
Start Time	Right	Left	Peds	App. Total	Right	Thru	Peds	App. Total	Thru	Left	Peds	App. Total	Int. Total
03:30 PM	9	1	2	12	1	0	0	1	0	6	0	6	19
03:45 PM	11	0	0	11	0	0	0	0	0	5	0	5	16
Total	20	1	2	23	1	0	0	1	0	11	0	11	35
04:00 PM	14	0	0	14	4	0	0	4	0	6	0	6	24
04:15 PM	11	0	1	12	2	0	0	2	0	10	0	10	24
04:30 PM	10	0	1	11	1	0	0	1	0	6	0	6	18
04:45 PM	15	0	2	17	3	0	0	3	0	8	0	8	28
Total	50	0	4	54	10	0	0	10	0	30	0	30	94
05:00 PM	19	1	2	22	2	0	0	2	0	4	0	4	28
05:15 PM	5	1	2	8	3	0	0	3	0	8	0	8	19
05:30 PM	15	0	1	16	2	0	0	2	0	10	0	10	28
05:45 PM	12	0	1	13	4	0	0	4	0	9	0	9	26
Total	51	2	6	59	11	0	0	11	0	31	0	31	101
06:00 PM	14	0	1	15	1	0	0	1	0	6	0	6	22
06:15 PM	22	1	0	23	4	0	0	4	0	3	0	3	30
Grand Total	157	4	13	174	27	0	0	27	0	81	0	81	282
Apprch %	90.2	2.3	7.5		100	0	0		0	100	0		
Total %	55.7	1.4	4.6	61.7	9.6	0	0	9.6	0	28.7	0	28.7	

	N Jackson St Southbound			US 50 Westbound			US 50 Eastbound			
Start Time	Right	Left	App. Total	Right	Thru	App. Total	Thru	Left	App. Total	Int. Total
Peak Hour Analysis From 03:30 PM to 06:15 PM - Peak 1 of 1										
Peak Hour for Entire Intersection Begins at 05:30 PM										
05:30 PM	15	0	15	2	0	2	0	**10**	**10**	27
05:45 PM	12	0	12	**4**	0	**4**	0	9	9	25
06:00 PM	14	0	14	1	0	1	0	6	6	21
06:15 PM	**22**	**1**	**23**	4	0	4	0	3	3	**30**
Total Volume	63	1	64	11	0	11	0	28	28	103
% App. Total	98.4	1.6		100	0		0	100		
PHF	.716	.250	.696	.688	.000	.688	.000	.700	.700	.858

Peggy Malone & Associates, Inc.
(888) 247-8602

File Name : 4-N Jackson St and US 50 PM
Site Code :
Start Date : 5/29/2019
Page No : 1

Groups Printed- Truck

	N Jackson St Southbound				US 50 Westbound				US 50 Eastbound				
Start Time	Right	Left	Peds	App. Total	Right	Thru	Peds	App. Total	Thru	Left	Peds	App. Total	Int. Total
03:30 PM	1	0	0	1	0	0	0	0	0	0	0	0	1
03:45 PM	0	0	0	0	0	0	0	0	0	0	0	0	0
Total	1	0	0	1	0	0	0	0	0	0	0	0	1
04:00 PM	1	0	0	1	0	0	0	0	0	0	0	0	1
04:15 PM	0	0	0	0	0	0	0	0	0	0	0	0	0
04:30 PM	0	0	0	0	0	0	0	0	0	0	0	0	0
04:45 PM	0	0	0	0	0	0	0	0	0	0	0	0	0
Total	1	0	0	1	0	0	0	0	0	0	0	0	1
05:00 PM	0	0	0	0	0	0	0	0	0	0	0	0	0
05:15 PM	0	0	0	0	0	0	0	0	0	0	0	0	0
05:30 PM	0	0	0	0	0	0	0	0	0	0	0	0	0
05:45 PM	1	0	0	1	0	0	0	0	0	0	0	0	1
Total	1	0	0	1	0	0	0	0	0	0	0	0	1
06:00 PM	0	0	0	0	0	0	0	0	0	0	0	0	0
06:15 PM	1	0	0	1	0	0	0	0	0	1	0	1	2
Grand Total	4	0	0	4	0	0	0	0	0	1	0	1	5
Apprch %	100	0	0		0	0	0		0	100	0		
Total %	80	0	0	80	0	0	0	0	0	20	0	20	

	N Jackson St Southbound			US 50 Westbound			US 50 Eastbound			
Start Time	Right	Left	App. Total	Right	Thru	App. Total	Thru	Left	App. Total	Int. Total
Peak Hour Analysis From 03:30 PM to 06:15 PM - Peak 1 of 1										
Peak Hour for Entire Intersection Begins at 05:30 PM										
05:30 PM	0	0	0	0	0	0	0	0	0	0
05:45 PM	**1**	0	**1**	0	0	0	0	0	0	1
06:00 PM	0	0	0	0	0	0	0	0	0	0
06:15 PM	1	0	1	0	0	0	0	**1**	**1**	**2**
Total Volume	2	0	2	0	0	0	0	1	1	3
% App. Total	100	0		0	0		0	100		
PHF	.500	.000	.500	.000	.000	.000	.000	.250	.250	.375

Peggy Malone & Associates, Inc.
(888) 247-8602

File Name : 4-N Jackson St and US 50 PM
Site Code :
Start Date : 5/29/2019
Page No : 1

Groups Printed- Bicycles on Crosswalk

	N Jackson St Southbound				US 50 Westbound				US 50 Eastbound				
Start Time	Right	Left	Peds	App. Total	Right	Thru	Peds	App. Total	Thru	Left	Peds	App. Total	Int. Total
03:30 PM	0	0	0	0	0	0	0	0	0	0	0	0	0
03:45 PM	0	0	3	3	0	0	0	0	0	0	0	0	3
Total	0	0	3	3	0	0	0	0	0	0	0	0	3
04:00 PM	0	0	1	1	0	0	0	0	0	0	0	0	1
04:15 PM	0	0	2	2	0	0	0	0	0	0	0	0	2
04:30 PM	0	0	1	1	0	0	0	0	0	0	0	0	1
04:45 PM	0	0	1	1	0	0	0	0	0	0	0	0	1
Total	0	0	5	5	0	0	0	0	0	0	0	0	5
05:00 PM	0	0	0	0	0	0	0	0	0	0	0	0	0
05:15 PM	0	0	1	1	0	0	0	0	0	0	0	0	1
05:30 PM	0	0	0	0	0	0	0	0	0	0	0	0	0
05:45 PM	0	0	0	0	0	0	0	0	0	0	0	0	0
Total	0	0	1	1	0	0	0	0	0	0	0	0	1
06:00 PM	0	0	1	1	0	0	0	0	0	0	0	0	1
06:15 PM	0	0	1	1	0	0	0	0	0	0	0	0	1
Grand Total	0	0	11	11	0	0	0	0	0	0	0	0	11
Apprch %	0	0	100		0	0	0		0	0	0		
Total %	0	0	100	100	0	0	0	0	0	0	0	0	

	N Jackson St Southbound			US 50 Westbound			US 50 Eastbound			
Start Time	Right	Left	App. Total	Right	Thru	App. Total	Thru	Left	App. Total	Int. Total
Peak Hour Analysis From 03:30 PM to 06:15 PM - Peak 1 of 1										
Peak Hour for Entire Intersection Begins at 03:30 PM										
03:30 PM	0	0	0	0	0	0	0	0	0	0
03:45 PM	0	0	0	0	0	0	0	0	0	0
04:00 PM	0	0	0	0	0	0	0	0	0	0
04:15 PM	0	0	0	0	0	0	0	0	0	0
Total Volume	0	0	0	0	0	0	0	0	0	0
% App. Total	0	0		0	0		0	0		
PHF	.000	.000	.000	.000	.000	.000	.000	.000	.000	.000

Peggy Malone & Associates, Inc.

(888) 247-8602

File Name : 4-N Jackson St and US 50 PM
Site Code :
Start Date : 5/29/2019
Page No : 1

Groups Printed- Combined

	N Jackson St Southbound				US 50 Westbound				US 50 Eastbound				
Start Time	Right	Left	Peds	App. Total	Right	Thru	Peds	App. Total	Thru	Left	Peds	App. Total	Int. Total
03:30 PM	10	1	2	13	1	0	0	1	0	6	0	6	20
03:45 PM	11	0	3	14	0	0	0	0	0	5	0	5	19
Total	21	1	5	27	1	0	0	1	0	11	0	11	39
04:00 PM	15	0	1	16	4	0	0	4	0	6	0	6	26
04:15 PM	11	0	3	14	2	0	0	2	0	10	0	10	26
04:30 PM	10	0	2	12	1	0	0	1	0	6	0	6	19
04:45 PM	15	0	3	18	3	0	0	3	0	8	0	8	29
Total	51	0	9	60	10	0	0	10	0	30	0	30	100
05:00 PM	19	1	2	22	2	0	0	2	0	4	0	4	28
05:15 PM	5	1	3	9	3	0	0	3	0	8	0	8	20
05:30 PM	15	0	1	16	2	0	0	2	0	10	0	10	28
05:45 PM	13	0	1	14	4	0	0	4	0	9	0	9	27
Total	52	2	7	61	11	0	0	11	0	31	0	31	103
06:00 PM	14	0	2	16	1	0	0	1	0	6	0	6	23
06:15 PM	23	1	1	25	4	0	0	4	0	4	0	4	33
Grand Total	161	4	24	189	27	0	0	27	0	82	0	82	298
Apprch %	85.2	2.1	12.7		100	0	0		0	100	0		
Total %	54	1.3	8.1	63.4	9.1	0	0	9.1	0	27.5	0	27.5	

	N Jackson St Southbound			US 50 Westbound			US 50 Eastbound			
Start Time	Right	Left	App. Total	Right	Thru	App. Total	Thru	Left	App. Total	Int. Total
Peak Hour Analysis From 03:30 PM to 06:15 PM - Peak 1 of 1										
Peak Hour for Entire Intersection Begins at 05:30 PM										
05:30 PM	15	0	15	2	0	2	0	**10**	**10**	27
05:45 PM	13	0	13	**4**	0	**4**	0	9	9	26
06:00 PM	14	0	14	1	0	1	0	6	6	21
06:15 PM	**23**	**1**	**24**	4	0	4	0	4	4	**32**
Total Volume	65	1	66	11	0	11	0	29	29	106
% App. Total	98.5	1.5		100	0		0	100		
PHF	.707	.250	.688	.688	.000	.688	.000	.725	.725	.828

Peggy Malone & Associates, Inc.

(888) 247-8602

File Name : 5-St Irving St and US 50 AM
Site Code :
Start Date : 5/29/2019
Page No : 1

Groups Printed- Car

	N Irving Southbound					US 50 Westbound					S Irving Northbound					US 50 Eastbound					
Start Time	Right	Thru	Left	Peds	App. Total	Right	Thru	Left	Peds	App. Total	Right	Thru	Left	Peds	App. Total	Right	Thru	Left	Peds	App. Total	Int. Total
06:30 AM	1	1	1	0	3	1	272	0	0	273	5	4	1	4	14	2	807	4	0	813	1103
06:45 AM	0	2	2	0	4	0	302	2	1	305	5	4	11	3	23	12	797	4	0	813	1145
Total	1	3	3	0	7	1	574	2	1	578	10	8	12	7	37	14	1604	8	0	1626	2248
07:00 AM	3	5	0	1	9	2	382	3	0	387	7	8	10	2	27	9	828	3	0	840	1263
07:15 AM	4	8	3	0	15	1	445	2	1	449	11	12	14	1	38	15	814	3	0	832	1334
07:30 AM	5	8	2	0	15	2	466	0	2	470	9	13	21	4	47	14	843	4	3	864	1396
07:45 AM	8	9	7	0	24	1	492	0	2	495	5	17	20	3	45	5	806	4	1	816	1380
Total	20	30	12	1	63	6	1785	5	5	1801	32	50	65	10	157	43	3291	14	4	3352	5373
08:00 AM	5	5	7	0	17	2	453	3	0	458	12	19	36	0	67	3	742	3	0	748	1290
08:15 AM	2	4	0	0	6	2	438	1	3	444	9	19	27	5	60	3	800	2	0	805	1315
08:30 AM	5	9	2	0	16	3	417	1	0	421	11	19	14	2	46	4	799	3	0	806	1289
08:45 AM	4	5	2	0	11	2	410	2	0	414	6	12	9	2	29	7	804	3	0	814	1268
Total	16	23	11	0	50	9	1718	7	3	1737	38	69	86	9	202	17	3145	11	0	3173	5162
09:00 AM	2	4	4	0	10	2	356	2	0	360	5	10	13	1	29	8	823	11	0	842	1241
09:15 AM	6	17	9	0	32	8	331	4	0	343	1	8	9	2	20	13	736	8	1	758	1153
Grand Total	45	77	39	1	162	26	4764	20	9	4819	86	145	185	29	445	95	9599	52	5	9751	15177
Apprch %	27.8	47.5	24.1	0.6		0.5	98.9	0.4	0.2		19.3	32.6	41.6	6.5		1	98.4	0.5	0.1		
Total %	0.3	0.5	0.3	0	1.1	0.2	31.4	0.1	0.1	31.8	0.6	1	1.2	0.2	2.9	0.6	63.2	0.3	0	64.2	

	N Irving Southbound				US 50 Westbound				S Irving Northbound				US 50 Eastbound				
Start Time	Right	Thru	Left	App. Total	Right	Thru	Left	App. Total	Right	Thru	Left	App. Total	Right	Thru	Left	App. Total	Int. Total
Peak Hour Analysis From 06:30 AM to 09:15 AM - Peak 1 of 1																	
Peak Hour for Entire Intersection Begins at 07:15 AM																	
07:15 AM	4	8	3	15	1	445	2	448	11	12	14	37	**15**	814	3	832	1332
07:30 AM	5	8	2	15	**2**	466	0	468	9	13	21	43	14	**843**	**4**	**861**	**1387**
07:45 AM	**8**	**9**	**7**	**24**	1	**492**	0	**493**	5	17	20	42	5	806	4	815	1374
08:00 AM	5	5	7	17	2	453	**3**	458	**12**	**19**	**36**	**67**	3	742	3	748	1290
Total Volume	22	30	19	71	6	1856	5	1867	37	61	91	189	37	3205	14	3256	5383
% App. Total	31	42.3	26.8		0.3	99.4	0.3		19.6	32.3	48.1		1.1	98.4	0.4		
PHF	.688	.833	.679	.740	.750	.943	.417	.947	.771	.803	.632	.705	.617	.950	.875	.945	.970

Peggy Malone & Associates, Inc.

(888) 247-8602

File Name : 5-St Irving St and US 50 AM
Site Code :
Start Date : 5/29/2019
Page No : 1

Groups Printed- Truck

	N Irving Southbound					US 50 Westbound					S Irving Northbound					US 50 Eastbound					
Start Time	Right	Thru	Left	Peds	App. Total	Right	Thru	Left	Peds	App. Total	Right	Thru	Left	Peds	App. Total	Right	Thru	Left	Peds	App. Total	Int. Total
06:30 AM	0	0	0	0	0	0	3	0	0	3	0	0	0	0	0	0	12	0	0	12	15
06:45 AM	0	0	0	0	0	0	6	0	0	6	1	0	0	0	1	0	11	0	0	11	18
Total	0	0	0	0	0	0	9	0	0	9	1	0	0	0	1	0	23	0	0	23	33
07:00 AM	0	0	0	0	0	0	10	0	0	10	0	0	2	0	2	0	7	0	0	7	19
07:15 AM	0	0	0	0	0	0	10	0	0	10	0	0	1	0	1	3	15	0	0	18	29
07:30 AM	0	2	0	0	2	0	14	0	0	14	0	0	0	0	0	0	14	0	0	14	30
07:45 AM	0	0	0	0	0	0	13	0	0	13	0	1	2	0	3	0	22	0	0	22	38
Total	0	2	0	0	2	0	47	0	0	47	0	1	5	0	6	3	58	0	0	61	116
08:00 AM	0	0	0	0	0	0	15	0	0	15	0	0	1	0	1	0	10	0	0	10	26
08:15 AM	0	0	0	0	0	0	7	0	0	7	0	0	0	0	0	0	12	0	0	12	19
08:30 AM	0	1	0	0	1	1	6	0	0	7	0	1	0	0	1	0	15	0	0	15	24
08:45 AM	0	0	1	0	1	0	11	0	0	11	0	1	0	0	1	0	15	0	0	15	28
Total	0	1	1	0	2	1	39	0	0	40	0	2	1	0	3	0	52	0	0	52	97
09:00 AM	1	0	0	0	1	0	12	0	0	12	0	0	0	0	0	0	11	0	0	11	24
09:15 AM	0	0	1	0	1	1	10	1	0	12	0	0	0	0	0	1	13	0	0	14	27
Grand Total	1	3	2	0	6	2	117	1	0	120	1	3	6	0	10	4	157	0	0	161	297
Apprch %	16.7	50	33.3	0		1.7	97.5	0.8	0		10	30	60	0		2.5	97.5	0	0		
Total %	0.3	1	0.7	0	2	0.7	39.4	0.3	0	40.4	0.3	1	2	0	3.4	1.3	52.9	0	0	54.2	

	N Irving Southbound				US 50 Westbound				S Irving Northbound				US 50 Eastbound				
Start Time	Right	Thru	Left	App. Total	Right	Thru	Left	App. Total	Right	Thru	Left	App. Total	Right	Thru	Left	App. Total	Int. Total
Peak Hour Analysis From 06:30 AM to 09:15 AM - Peak 1 of 1																	
Peak Hour for Entire Intersection Begins at 07:15 AM																	
07:15 AM	0	0	0	0	0	10	0	10	0	0	1	1	**3**	15	0	18	29
07:30 AM	0	**2**	0	**2**	0	14	0	14	0	0	0	0	0	14	0	14	30
07:45 AM	0	0	0	0	0	13	0	13	0	**1**	**2**	**3**	0	**22**	0	**22**	**38**
08:00 AM	0	0	0	0	0	**15**	0	**15**	0	0	1	1	0	10	0	10	26
Total Volume	0	2	0	2	0	52	0	52	0	1	4	5	3	61	0	64	123
% App. Total	0	100	0		0	100	0		0	20	80		4.7	95.3	0		
PHF	.000	.250	.000	.250	.000	.867	.000	.867	.000	.250	.500	.417	.250	.693	.000	.727	.809

Peggy Malone & Associates, Inc.

(888) 247-8602

File Name : 5-St Irving St and US 50 AM
Site Code :
Start Date : 5/29/2019
Page No : 1

Groups Printed- Bicycles on Crosswalk

	N Irving Southbound					US 50 Westbound					S Irving Northbound					US 50 Eastbound					
Start Time	Right	Thru	Left	Peds	App. Total	Right	Thru	Left	Peds	App. Total	Right	Thru	Left	Peds	App. Total	Right	Thru	Left	Peds	App. Total	Int. Total
06:30 AM	0	0	0	0	0	0	0	0	2	2	0	0	0	0	0	0	0	0	1	1	3
06:45 AM	0	0	0	0	0	0	0	0	1	1	0	0	0	0	0	0	0	0	0	0	1
Total	0	0	0	0	0	0	0	0	3	3	0	0	0	0	0	0	0	0	1	1	4
07:00 AM	0	0	0	0	0	0	0	0	0	0	0	0	0	0	0	0	0	0	1	1	1
07:15 AM	0	0	0	0	0	0	0	0	1	1	0	0	0	1	1	0	0	0	0	0	2
07:30 AM	0	0	0	0	0	0	0	0	0	0	0	0	0	0	0	0	0	0	0	0	0
07:45 AM	0	0	0	0	0	0	0	0	0	0	0	0	0	1	1	0	0	0	0	0	1
Total	0	0	0	0	0	0	0	0	1	1	0	0	0	2	2	0	0	0	1	1	4
08:00 AM	0	0	0	0	0	0	0	0	1	1	0	0	0	0	0	0	0	0	0	0	1
08:15 AM	0	0	0	0	0	0	0	0	3	3	0	0	0	0	0	0	0	0	0	0	3
08:30 AM	0	0	0	0	0	0	0	0	1	1	0	0	0	0	0	0	0	0	0	0	1
08:45 AM	0	0	0	0	0	0	0	0	2	2	0	0	0	0	0	0	0	0	0	0	2
Total	0	0	0	0	0	0	0	0	7	7	0	0	0	0	0	0	0	0	0	0	7
09:00 AM	0	0	0	0	0	0	0	0	0	0	0	0	0	0	0	0	0	0	0	0	0
09:15 AM	0	0	0	0	0	0	0	0	0	0	0	0	0	1	1	0	0	0	0	0	1
Grand Total	0	0	0	0	0	0	0	0	11	11	0	0	0	3	3	0	0	0	2	2	16
Apprch %	0	0	0	0		0	0	0	100		0	0	0	100		0	0	0	100		
Total %	0	0	0	0	0	0	0	0	68.8	68.8	0	0	0	18.8	18.8	0	0	0	12.5	12.5	

	N Irving Southbound				US 50 Westbound				S Irving Northbound				US 50 Eastbound				
Start Time	Right	Thru	Left	App. Total	Right	Thru	Left	App. Total	Right	Thru	Left	App. Total	Right	Thru	Left	App. Total	Int. Total
Peak Hour Analysis From 06:30 AM to 09:15 AM - Peak 1 of 1																	
Peak Hour for Entire Intersection Begins at 06:30 AM																	
06:30 AM	0	0	0	0	0	0	0	0	0	0	0	0	0	0	0	0	0
06:45 AM	0	0	0	0	0	0	0	0	0	0	0	0	0	0	0	0	0
07:00 AM	0	0	0	0	0	0	0	0	0	0	0	0	0	0	0	0	0
07:15 AM	0	0	0	0	0	0	0	0	0	0	0	0	0	0	0	0	0
Total Volume	0	0	0	0	0	0	0	0	0	0	0	0	0	0	0	0	0
% App. Total	0	0	0		0	0	0		0	0	0		0	0	0		
PHF	.000	.000	.000	.000	.000	.000	.000	.000	.000	.000	.000	.000	.000	.000	.000	.000	.000

Peggy Malone & Associates, Inc.

(888) 247-8602

File Name : 5-St Irving St and US 50 AM
Site Code :
Start Date : 5/29/2019
Page No : 1

Groups Printed- Combined

	N Irving Southbound					US 50 Westbound					S Irving Northbound					US 50 Eastbound					
Start Time	Right	Thru	Left	Peds	App. Total	Right	Thru	Left	Peds	App. Total	Right	Thru	Left	Peds	App. Total	Right	Thru	Left	Peds	App. Total	Int. Total
06:30 AM	1	1	1	0	3	1	275	0	2	278	5	4	1	4	14	2	819	4	1	826	1121
06:45 AM	0	2	2	0	4	0	308	2	2	312	6	4	11	3	24	12	808	4	0	824	1164
Total	1	3	3	0	7	1	583	2	4	590	11	8	12	7	38	14	1627	8	1	1650	2285
07:00 AM	3	5	0	1	9	2	392	3	0	397	7	8	12	2	29	9	835	3	1	848	1283
07:15 AM	4	8	3	0	15	1	455	2	2	460	11	12	15	2	40	18	829	3	0	850	1365
07:30 AM	5	10	2	0	17	2	480	0	2	484	9	13	21	4	47	14	857	4	3	878	1426
07:45 AM	8	9	7	0	24	1	505	0	2	508	5	18	22	4	49	5	828	4	1	838	1419
Total	20	32	12	1	65	6	1832	5	6	1849	32	51	70	12	165	46	3349	14	5	3414	5493
08:00 AM	5	5	7	0	17	2	468	3	1	474	12	19	37	0	68	3	752	3	0	758	1317
08:15 AM	2	4	0	0	6	2	445	1	6	454	9	19	27	5	60	3	812	2	0	817	1337
08:30 AM	5	10	2	0	17	4	423	1	1	429	11	20	14	2	47	4	814	3	0	821	1314
08:45 AM	4	5	3	0	12	2	421	2	2	427	6	13	9	2	30	7	819	3	0	829	1298
Total	16	24	12	0	52	10	1757	7	10	1784	38	71	87	9	205	17	3197	11	0	3225	5266
09:00 AM	3	4	4	0	11	2	368	2	0	372	5	10	13	1	29	8	834	11	0	853	1265
09:15 AM	6	17	10	0	33	9	341	5	0	355	1	8	9	3	21	14	749	8	1	772	1181
Grand Total	46	80	41	1	168	28	4881	21	20	4950	87	148	191	32	458	99	9756	52	7	9914	15490
Apprch %	27.4	47.6	24.4	0.6		0.6	98.6	0.4	0.4		19	32.3	41.7	7		1	98.4	0.5	0.1		
Total %	0.3	0.5	0.3	0	1.1	0.2	31.5	0.1	0.1	32	0.6	1	1.2	0.2	3	0.6	63	0.3	0	64	

	N Irving Southbound				US 50 Westbound				S Irving Northbound				US 50 Eastbound				
Start Time	Right	Thru	Left	App. Total	Right	Thru	Left	App. Total	Right	Thru	Left	App. Total	Right	Thru	Left	App. Total	Int. Total
Peak Hour Analysis From 06:30 AM to 09:15 AM - Peak 1 of 1																	
Peak Hour for Entire Intersection Begins at 07:15 AM																	
07:15 AM	4	8	3	15	1	455	2	458	11	12	15	38	**18**	829	3	850	1361
07:30 AM	5	**10**	2	17	**2**	480	0	482	9	13	21	43	14	**857**	**4**	**875**	**1417**
07:45 AM	**8**	9	**7**	**24**	1	**505**	0	**506**	5	18	22	45	5	828	4	837	1412
08:00 AM	5	5	7	17	2	468	**3**	473	**12**	**19**	**37**	**68**	3	752	3	758	1316
Total Volume	22	32	19	73	6	1908	5	1919	37	62	95	194	40	3266	14	3320	5506
% App. Total	30.1	43.8	26		0.3	99.4	0.3		19.1	32	49		1.2	98.4	0.4		
PHF	.688	.800	.679	.760	.750	.945	.417	.948	.771	.816	.642	.713	.556	.953	.875	.949	.971

Peggy Malone & Associates, Inc.

(888) 247-8602

File Name : 5-St Irving St and US 50 PM
Site Code :
Start Date : 5/29/2019
Page No : 1

Groups Printed- Car

	N Irving Southbound					US 50 Westbound					S Irving Northbound					US 50 Eastbound					
Start Time	Right	Thru	Left	Peds	App. Total	Right	Thru	Left	Peds	App. Total	Right	Thru	Left	Peds	App. Total	Right	Thru	Left	Peds	App. Total	Int. Total
03:30 PM	7	13	1	0	21	3	746	0	0	749	5	8	14	0	27	18	508	1	0	527	1324
03:45 PM	7	9	4	0	20	2	678	3	0	683	2	8	15	0	25	15	501	9	0	525	1253
Total	14	22	5	0	41	5	1424	3	0	1432	7	16	29	0	52	33	1009	10	0	1052	2577
04:00 PM	12	8	2	0	22	2	786	1	1	790	4	8	21	0	33	23	535	6	0	564	1409
04:15 PM	5	7	2	0	14	3	696	2	0	701	0	8	19	0	27	41	552	8	0	601	1343
04:30 PM	10	7	2	1	20	1	759	2	0	762	3	8	15	0	26	23	554	5	1	583	1391
04:45 PM	17	13	1	0	31	1	727	7	0	735	5	8	27	2	42	30	545	0	0	575	1383
Total	44	35	7	1	87	7	2968	12	1	2988	12	32	82	2	128	117	2186	19	1	2323	5526
05:00 PM	12	11	5	1	29	2	809	1	0	812	3	11	49	1	64	28	520	6	0	554	1459
05:15 PM	20	11	5	0	36	1	763	3	3	770	2	7	30	0	39	37	538	4	1	580	1425
05:30 PM	12	19	4	0	35	2	738	5	0	745	0	4	27	0	31	28	538	3	0	569	1380
05:45 PM	18	17	3	0	38	3	797	3	0	803	4	15	27	1	47	30	554	5	0	589	1477
Total	62	58	17	1	138	8	3107	12	3	3130	9	37	133	2	181	123	2150	18	1	2292	5741
06:00 PM	6	14	1	0	21	0	690	4	1	695	4	9	31	0	44	30	530	8	1	569	1329
06:15 PM	11	13	3	0	27	1	724	1	1	727	4	6	19	0	29	24	523	8	0	555	1338
Grand Total	137	142	33	2	314	21	8913	32	6	8972	36	100	294	4	434	327	6398	63	3	6791	16511
Apprch %	43.6	45.2	10.5	0.6		0.2	99.3	0.4	0.1		8.3	23	67.7	0.9		4.8	94.2	0.9	0		
Total %	0.8	0.9	0.2	0	1.9	0.1	54	0.2	0	54.3	0.2	0.6	1.8	0	2.6	2	38.7	0.4	0	41.1	

	N Irving Southbound				US 50 Westbound				S Irving Northbound				US 50 Eastbound				
Start Time	Right	Thru	Left	App. Total	Right	Thru	Left	App. Total	Right	Thru	Left	App. Total	Right	Thru	Left	App. Total	Int. Total
Peak Hour Analysis From 03:30 PM to 06:15 PM - Peak 1 of 1																	
Peak Hour for Entire Intersection Begins at 05:00 PM																	
05:00 PM	12	11	**5**	28	2	**809**	1	**812**	3	11	**49**	**63**	28	520	**6**	554	1457
05:15 PM	**20**	11	5	36	1	763	3	767	2	7	30	39	**37**	538	4	579	1421
05:30 PM	12	**19**	4	35	2	738	**5**	745	0	4	27	31	28	538	3	569	1380
05:45 PM	18	17	3	**38**	**3**	797	3	803	**4**	**15**	27	46	30	**554**	5	**589**	**1476**
Total Volume	62	58	17	137	8	3107	12	3127	9	37	133	179	123	2150	18	2291	5734
% App. Total	45.3	42.3	12.4		0.3	99.4	0.4		5	20.7	74.3		5.4	93.8	0.8		
PHF	.775	.763	.850	.901	.667	.960	.600	.963	.563	.617	.679	.710	.831	.970	.750	.972	.971

Peggy Malone & Associates, Inc.

(888) 247-8602

File Name : 5-St Irving St and US 50 PM
Site Code :
Start Date : 5/29/2019
Page No : 1

Groups Printed- Truck

	N Irving Southbound					US 50 Westbound					S Irving Northbound					US 50 Eastbound					
Start Time	Right	Thru	Left	Peds	App. Total	Right	Thru	Left	Peds	App. Total	Right	Thru	Left	Peds	App. Total	Right	Thru	Left	Peds	App. Total	Int. Total
03:30 PM	0	0	0	0	0	0	12	0	0	12	0	0	0	0	0	0	10	0	0	10	22
03:45 PM	0	0	0	0	0	0	17	0	0	17	0	1	0	0	1	0	11	1	0	12	30
Total	0	0	0	0	0	0	29	0	0	29	0	1	0	0	1	0	21	1	0	22	52
04:00 PM	1	0	0	0	1	0	13	0	0	13	0	0	0	0	0	2	11	0	0	13	27
04:15 PM	0	1	0	0	1	0	12	1	0	13	0	0	0	0	0	0	14	0	0	14	28
04:30 PM	0	0	0	0	0	0	5	0	0	5	0	0	0	0	0	0	16	0	0	16	21
04:45 PM	2	0	0	0	2	0	12	0	0	12	0	0	0	0	0	0	10	0	0	10	24
Total	3	1	0	0	4	0	42	1	0	43	0	0	0	0	0	2	51	0	0	53	100
05:00 PM	0	0	0	0	0	0	4	0	0	4	0	0	0	0	0	0	11	0	0	11	15
05:15 PM	0	0	0	0	0	0	7	0	0	7	0	0	0	0	0	0	8	0	0	8	15
05:30 PM	0	0	0	0	0	0	4	0	0	4	0	0	1	0	1	0	9	0	0	9	14
05:45 PM	0	0	0	0	0	0	4	0	0	4	0	0	0	0	0	0	10	0	0	10	14
Total	0	0	0	0	0	0	19	0	0	19	0	0	1	0	1	0	38	0	0	38	58
06:00 PM	0	0	0	0	0	0	5	0	0	5	0	0	0	0	0	0	8	0	0	8	13
06:15 PM	0	0	0	0	0	0	4	0	0	4	0	0	0	0	0	0	7	1	0	8	12
Grand Total	3	1	0	0	4	0	99	1	0	100	0	1	1	0	2	2	125	2	0	129	235
Apprch %	75	25	0	0		0	99	1	0		0	50	50	0		1.6	96.9	1.6	0		
Total %	1.3	0.4	0	0	1.7	0	42.1	0.4	0	42.6	0	0.4	0.4	0	0.9	0.9	53.2	0.9	0	54.9	

	N Irving Southbound				US 50 Westbound				S Irving Northbound				US 50 Eastbound				
Start Time	Right	Thru	Left	App. Total	Right	Thru	Left	App. Total	Right	Thru	Left	App. Total	Right	Thru	Left	App. Total	Int. Total
Peak Hour Analysis From 03:30 PM to 06:15 PM - Peak 1 of 1																	
Peak Hour for Entire Intersection Begins at 03:30 PM																	
03:30 PM	0	0	0	0	0	12	0	12	0	0	0	0	0	10	0	10	22
03:45 PM	0	0	0	0	0	**17**	0	**17**	0	**1**	0	**1**	0	11	**1**	12	**30**
04:00 PM	**1**	0	0	**1**	0	13	0	13	0	0	0	0	**2**	11	0	13	27
04:15 PM	0	**1**	0	1	0	12	**1**	13	0	0	0	0	0	**14**	0	**14**	28
Total Volume	1	1	0	2	0	54	1	55	0	1	0	1	2	46	1	49	107
% App. Total	50	50	0		0	98.2	1.8		0	100	0		4.1	93.9	2		
PHF	.250	.250	.000	.500	.000	.794	.250	.809	.000	.250	.000	.250	.250	.821	.250	.875	.892

Peggy Malone & Associates, Inc.

(888) 247-8602

File Name : 5-St Irving St and US 50 PM
Site Code :
Start Date : 5/29/2019
Page No : 1

Groups Printed- Bicycles on Crosswalk

	N Irving Southbound					US 50 Westbound					S Irving Northbound					US 50 Eastbound					
Start Time	Right	Thru	Left	Peds	App. Total	Right	Thru	Left	Peds	App. Total	Right	Thru	Left	Peds	App. Total	Right	Thru	Left	Peds	App. Total	Int. Total
03:30 PM	0	0	0	0	0	0	0	0	0	0	0	0	0	0	0	0	0	0	0	0	0
03:45 PM	0	0	0	0	0	0	0	0	0	0	0	0	0	0	0	0	0	0	0	0	0
Total	0	0	0	0	0	0	0	0	0	0	0	0	0	0	0	0	0	0	0	0	0
04:00 PM	0	0	0	0	0	0	0	0	0	0	0	0	0	0	0	0	0	0	0	0	0
04:15 PM	0	0	0	0	0	0	0	0	0	0	0	0	0	0	0	0	0	0	0	0	0
04:30 PM	0	0	0	0	0	0	0	0	0	0	0	0	0	0	0	0	0	0	0	0	0
04:45 PM	0	0	0	0	0	0	0	0	0	0	0	0	0	0	0	0	0	0	1	1	1
Total	0	0	0	0	0	0	0	0	0	0	0	0	0	0	0	0	0	0	1	1	1
05:00 PM	0	0	0	0	0	0	0	0	0	0	0	0	0	0	0	0	0	0	0	0	0
05:15 PM	0	0	0	0	0	0	0	0	0	0	0	0	0	0	0	0	0	0	0	0	0
05:30 PM	0	0	0	0	0	0	0	0	0	0	0	0	0	0	0	0	0	0	0	0	0
05:45 PM	0	0	0	0	0	0	0	0	0	0	0	0	0	0	0	0	0	0	0	0	0
Total	0	0	0	0	0	0	0	0	0	0	0	0	0	0	0	0	0	0	0	0	0
06:00 PM	0	0	0	0	0	0	0	0	0	0	0	0	0	0	0	0	0	0	0	0	0
06:15 PM	0	0	0	0	0	0	0	0	0	0	0	0	0	0	0	0	0	0	0	0	0
Grand Total	0	0	0	0	0	0	0	0	0	0	0	0	0	0	0	0	0	0	1	1	1
Apprch %	0	0	0	0		0	0	0	0		0	0	0	0		0	0	0	100		
Total %	0	0	0	0	0	0	0	0	0	0	0	0	0	0	0	0	0	0	100	100	

	N Irving Southbound				US 50 Westbound				S Irving Northbound				US 50 Eastbound				
Start Time	Right	Thru	Left	App. Total	Right	Thru	Left	App. Total	Right	Thru	Left	App. Total	Right	Thru	Left	App. Total	Int. Total
Peak Hour Analysis From 03:30 PM to 06:15 PM - Peak 1 of 1																	
Peak Hour for Entire Intersection Begins at 03:30 PM																	
03:30 PM	0	0	0	0	0	0	0	0	0	0	0	0	0	0	0	0	0
03:45 PM	0	0	0	0	0	0	0	0	0	0	0	0	0	0	0	0	0
04:00 PM	0	0	0	0	0	0	0	0	0	0	0	0	0	0	0	0	0
04:15 PM	0	0	0	0	0	0	0	0	0	0	0	0	0	0	0	0	0
Total Volume	0	0	0	0	0	0	0	0	0	0	0	0	0	0	0	0	0
% App. Total	0	0	0		0	0	0		0	0	0		0	0	0		
PHF	.000	.000	.000	.000	.000	.000	.000	.000	.000	.000	.000	.000	.000	.000	.000	.000	.000

Peggy Malone & Associates, Inc.

(888) 247-8602

File Name : 5-St Irving St and US 50 PM
Site Code :
Start Date : 5/29/2019
Page No : 1

Groups Printed- Combined

	N Irving Southbound					US 50 Westbound					S Irving Northbound					US 50 Eastbound					
Start Time	Right	Thru	Left	Peds	App. Total	Right	Thru	Left	Peds	App. Total	Right	Thru	Left	Peds	App. Total	Right	Thru	Left	Peds	App. Total	Int. Total
03:30 PM	7	13	1	0	21	3	758	0	0	761	5	8	14	0	27	18	518	1	0	537	1346
03:45 PM	7	9	4	0	20	2	695	3	0	700	2	9	15	0	26	15	512	10	0	537	1283
Total	14	22	5	0	41	5	1453	3	0	1461	7	17	29	0	53	33	1030	11	0	1074	2629
04:00 PM	13	8	2	0	23	2	799	1	1	803	4	8	21	0	33	25	546	6	0	577	1436
04:15 PM	5	8	2	0	15	3	708	3	0	714	0	8	19	0	27	41	566	8	0	615	1371
04:30 PM	10	7	2	1	20	1	764	2	0	767	3	8	15	0	26	23	570	5	1	599	1412
04:45 PM	19	13	1	0	33	1	739	7	0	747	5	8	27	2	42	30	555	0	1	586	1408
Total	47	36	7	1	91	7	3010	13	1	3031	12	32	82	2	128	119	2237	19	2	2377	5627
05:00 PM	12	11	5	1	29	2	813	1	0	816	3	11	49	1	64	28	531	6	0	565	1474
05:15 PM	20	11	5	0	36	1	770	3	3	777	2	7	30	0	39	37	546	4	1	588	1440
05:30 PM	12	19	4	0	35	2	742	5	0	749	0	4	28	0	32	28	547	3	0	578	1394
05:45 PM	18	17	3	0	38	3	801	3	0	807	4	15	27	1	47	30	564	5	0	599	1491
Total	62	58	17	1	138	8	3126	12	3	3149	9	37	134	2	182	123	2188	18	1	2330	5799
06:00 PM	6	14	1	0	21	0	695	4	1	700	4	9	31	0	44	30	538	8	1	577	1342
06:15 PM	11	13	3	0	27	1	728	1	1	731	4	6	19	0	29	24	530	9	0	563	1350
Grand Total	140	143	33	2	318	21	9012	33	6	9072	36	101	295	4	436	329	6523	65	4	6921	16747
Apprch %	44	45	10.4	0.6		0.2	99.3	0.4	0.1		8.3	23.2	67.7	0.9		4.8	94.2	0.9	0.1		
Total %	0.8	0.9	0.2	0	1.9	0.1	53.8	0.2	0	54.2	0.2	0.6	1.8	0	2.6	2	39	0.4	0	41.3	

	N Irving Southbound				US 50 Westbound				S Irving Northbound				US 50 Eastbound				
Start Time	Right	Thru	Left	App. Total	Right	Thru	Left	App. Total	Right	Thru	Left	App. Total	Right	Thru	Left	App. Total	Int. Total
Peak Hour Analysis From 03:30 PM to 06:15 PM - Peak 1 of 1																	
Peak Hour for Entire Intersection Begins at 05:00 PM																	
05:00 PM	12	11	**5**	28	2	**813**	1	**816**	3	11	**49**	**63**	28	531	**6**	565	1472
05:15 PM	**20**	11	5	36	1	770	3	774	2	7	30	39	**37**	546	4	587	1436
05:30 PM	12	**19**	4	35	2	742	**5**	749	0	4	28	32	28	547	3	578	1394
05:45 PM	18	17	3	**38**	**3**	801	3	807	**4**	**15**	27	46	30	**564**	5	**599**	**1490**
Total Volume	62	58	17	137	8	3126	12	3146	9	37	134	180	123	2188	18	2329	5792
% App. Total	45.3	42.3	12.4		0.3	99.4	0.4		5	20.6	74.4		5.3	93.9	0.8		
PHF	.775	.763	.850	.901	.667	.961	.600	.964	.563	.617	.684	.714	.831	.970	.750	.972	.972

Peggy Malone & Associates, Inc.
(888) 247-8602

File Name : 6-Hudson St and US 50 AM
Site Code :
Start Date : 5/29/2019
Page No : 1

Groups Printed- Car

	US 50 Westbound				S Hudson St Northbound				US 50 Eastbound				
Start Time	Thru	Left	Peds	App. Total	Right	Left	Peds	App. Total	Right	Thru	Peds	App. Total	Int. Total
06:30 AM	0	0	0	0	3	0	0	3	0	0	0	0	3
06:45 AM	0	0	0	0	5	0	0	5	2	0	0	2	7
Total	0	0	0	0	8	0	0	8	2	0	0	2	10
07:00 AM	0	0	0	0	5	2	2	9	1	0	0	1	10
07:15 AM	0	0	0	0	17	0	0	17	1	0	0	1	18
07:30 AM	0	0	0	0	7	1	4	12	2	0	0	2	14
07:45 AM	0	0	0	0	29	0	2	31	3	0	0	3	34
Total	0	0	0	0	58	3	8	69	7	0	0	7	76
08:00 AM	0	0	0	0	44	4	1	49	0	0	0	0	49
08:15 AM	0	0	0	0	26	0	1	27	1	0	0	1	28
08:30 AM	0	0	0	0	29	0	0	29	3	0	0	3	32
08:45 AM	0	0	0	0	25	0	0	25	0	0	0	0	25
Total	0	0	0	0	124	4	2	130	4	0	0	4	134
09:00 AM	0	0	0	0	8	0	0	8	1	0	0	1	9
09:15 AM	0	0	0	0	12	0	2	14	3	0	0	3	17
Grand Total	0	0	0	0	210	7	12	229	17	0	0	17	246
Apprch %	0	0	0		91.7	3.1	5.2		100	0	0		
Total %	0	0	0	0	85.4	2.8	4.9	93.1	6.9	0	0	6.9	

	US 50 Westbound			S Hudson St Northbound			US 50 Eastbound			
Start Time	Thru	Left	App. Total	Right	Left	App. Total	Right	Thru	App. Total	Int. Total
Peak Hour Analysis From 06:30 AM to 09:15 AM - Peak 1 of 1										
Peak Hour for Entire Intersection Begins at 07:45 AM										
07:45 AM	0	0	0	29	0	29	**3**	0	**3**	32
08:00 AM	0	0	0	**44**	**4**	**48**	0	0	0	**48**
08:15 AM	0	0	0	26	0	26	1	0	1	27
08:30 AM	0	0	0	29	0	29	3	0	3	32
Total Volume	0	0	0	128	4	132	7	0	7	139
% App. Total	0	0		97	3		100	0		
PHF	.000	.000	.000	.727	.250	.688	.583	.000	.583	.724

Peggy Malone & Associates, Inc.
(888) 247-8602

File Name : 6-Hudson St and US 50 AM
Site Code :
Start Date : 5/29/2019
Page No : 1

Groups Printed- Truck

	US 50 Westbound				S Hudson St Northbound				US 50 Eastbound				
Start Time	Thru	Left	Peds	App. Total	Right	Left	Peds	App. Total	Right	Thru	Peds	App. Total	Int. Total
06:30 AM	0	0	0	0	0	0	0	0	0	0	0	0	0
06:45 AM	0	0	0	0	0	0	0	0	0	0	0	0	0
Total	0	0	0	0	0	0	0	0	0	0	0	0	0
07:00 AM	0	0	0	0	0	0	0	0	0	0	0	0	0
07:15 AM	0	0	0	0	0	0	0	0	0	0	0	0	0
07:30 AM	0	0	0	0	0	0	0	0	0	0	0	0	0
07:45 AM	0	0	0	0	0	0	0	0	0	0	0	0	0
Total	0	0	0	0	0	0	0	0	0	0	0	0	0
08:00 AM	0	0	0	0	1	0	0	1	0	0	0	0	1
08:15 AM	0	0	0	0	0	0	0	0	0	0	0	0	0
08:30 AM	0	0	0	0	0	0	0	0	0	0	0	0	0
08:45 AM	0	0	0	0	0	0	0	0	0	0	0	0	0
Total	0	0	0	0	1	0	0	1	0	0	0	0	1
09:00 AM	0	0	0	0	0	0	0	0	0	0	0	0	0
09:15 AM	0	0	0	0	0	0	0	0	0	0	0	0	0
Grand Total	0	0	0	0	1	0	0	1	0	0	0	0	1
Apprch %	0	0	0		100	0	0		0	0	0		
Total %	0	0	0	0	100	0	0	100	0	0	0	0	

	US 50 Westbound			S Hudson St Northbound			US 50 Eastbound			
Start Time	Thru	Left	App. Total	Right	Left	App. Total	Right	Thru	App. Total	Int. Total
Peak Hour Analysis From 06:30 AM to 09:15 AM - Peak 1 of 1										
Peak Hour for Entire Intersection Begins at 07:15 AM										
07:15 AM	0	0	0	0	0	0	0	0	0	0
07:30 AM	0	0	0	0	0	0	0	0	0	0
07:45 AM	0	0	0	0	0	0	0	0	0	0
08:00 AM	0	0	0	**1**	0	**1**	0	0	0	**1**
Total Volume	0	0	0	1	0	1	0	0	0	1
% App. Total	0	0		100	0		0	0		
PHF	.000	.000	.000	.250	.000	.250	.000	.000	.000	.250

Peggy Malone & Associates, Inc.
(888) 247-8602

File Name : 6-Hudson St and US 50 AM
Site Code :
Start Date : 5/29/2019
Page No : 1

Groups Printed- Bicycles on Crosswalk

	US 50 Westbound				S Hudson St Northbound				US 50 Eastbound				
Start Time	Thru	Left	Peds	App. Total	Right	Left	Peds	App. Total	Right	Thru	Peds	App. Total	Int. Total
06:30 AM	0	0	0	0	0	0	0	0	0	0	0	0	0
06:45 AM	0	0	0	0	0	0	0	0	0	0	0	0	0
Total	0	0	0	0	0	0	0	0	0	0	0	0	0
07:00 AM	0	0	0	0	0	0	0	0	0	0	0	0	0
07:15 AM	0	0	0	0	0	0	0	0	0	0	0	0	0
07:30 AM	0	0	0	0	0	0	2	2	0	0	0	0	2
07:45 AM	0	0	0	0	0	0	2	2	0	0	0	0	2
Total	0	0	0	0	0	0	4	4	0	0	0	0	4
08:00 AM	0	0	0	0	0	0	1	1	0	0	0	0	1
08:15 AM	0	0	0	0	0	0	0	0	0	0	0	0	0
08:30 AM	0	0	0	0	0	0	0	0	0	0	0	0	0
08:45 AM	0	0	0	0	0	0	0	0	0	0	0	0	0
Total	0	0	0	0	0	0	1	1	0	0	0	0	1
09:00 AM	0	0	0	0	0	0	0	0	0	0	0	0	0
09:15 AM	0	0	0	0	0	0	1	1	0	0	0	0	1
Grand Total	0	0	0	0	0	0	6	6	0	0	0	0	6
Apprch %	0	0	0		0	0	100		0	0	0		
Total %	0	0	0	0	0	0	100	100	0	0	0	0	

	US 50 Westbound			S Hudson St Northbound			US 50 Eastbound			
Start Time	Thru	Left	App. Total	Right	Left	App. Total	Right	Thru	App. Total	Int. Total
Peak Hour Analysis From 06:30 AM to 09:15 AM - Peak 1 of 1										
Peak Hour for Entire Intersection Begins at 06:30 AM										
06:30 AM	0	0	0	0	0	0	0	0	0	0
06:45 AM	0	0	0	0	0	0	0	0	0	0
07:00 AM	0	0	0	0	0	0	0	0	0	0
07:15 AM	0	0	0	0	0	0	0	0	0	0
Total Volume	0	0	0	0	0	0	0	0	0	0
% App. Total	0	0		0	0		0	0		
PHF	.000	.000	.000	.000	.000	.000	.000	.000	.000	.000

Peggy Malone & Associates, Inc.

(888) 247-8602

File Name : 6-Hudson St and US 50 AM
Site Code :
Start Date : 5/29/2019
Page No : 1

Groups Printed- Combined

	US 50 Westbound				S Hudson St Northbound				US 50 Eastbound				
Start Time	Thru	Left	Peds	App. Total	Right	Left	Peds	App. Total	Right	Thru	Peds	App. Total	Int. Total
06:30 AM	0	0	0	0	3	0	0	3	0	0	0	0	3
06:45 AM	0	0	0	0	5	0	0	5	2	0	0	2	7
Total	0	0	0	0	8	0	0	8	2	0	0	2	10
07:00 AM	0	0	0	0	5	2	2	9	1	0	0	1	10
07:15 AM	0	0	0	0	17	0	0	17	1	0	0	1	18
07:30 AM	0	0	0	0	7	1	6	14	2	0	0	2	16
07:45 AM	0	0	0	0	29	0	4	33	3	0	0	3	36
Total	0	0	0	0	58	3	12	73	7	0	0	7	80
08:00 AM	0	0	0	0	45	4	2	51	0	0	0	0	51
08:15 AM	0	0	0	0	26	0	1	27	1	0	0	1	28
08:30 AM	0	0	0	0	29	0	0	29	3	0	0	3	32
08:45 AM	0	0	0	0	25	0	0	25	0	0	0	0	25
Total	0	0	0	0	125	4	3	132	4	0	0	4	136
09:00 AM	0	0	0	0	8	0	0	8	1	0	0	1	9
09:15 AM	0	0	0	0	12	0	3	15	3	0	0	3	18
Grand Total	0	0	0	0	211	7	18	236	17	0	0	17	253
Apprch %	0	0	0		89.4	3	7.6		100	0	0		
Total %	0	0	0	0	83.4	2.8	7.1	93.3	6.7	0	0	6.7	

	US 50 Westbound			S Hudson St Northbound			US 50 Eastbound			
Start Time	Thru	Left	App. Total	Right	Left	App. Total	Right	Thru	App. Total	Int. Total
Peak Hour Analysis From 06:30 AM to 09:15 AM - Peak 1 of 1										
Peak Hour for Entire Intersection Begins at 07:45 AM										
07:45 AM	0	0	0	29	0	29	**3**	0	**3**	32
08:00 AM	0	0	0	**45**	**4**	**49**	0	0	0	**49**
08:15 AM	0	0	0	26	0	26	1	0	1	27
08:30 AM	0	0	0	29	0	29	3	0	3	32
Total Volume	0	0	0	129	4	133	7	0	7	140
% App. Total	0	0		97	3		100	0		
PHF	.000	.000	.000	.717	.250	.679	.583	.000	.583	.714

Peggy Malone & Associates, Inc.
(888) 247-8602

File Name : 6-Hudson St and US 50 PM
Site Code :
Start Date : 5/29/2019
Page No : 1

Groups Printed- Car

	US 50 Westbound				S Hudson St Northbound				US 50 Eastbound				
Start Time	Thru	Left	Peds	App. Total	Right	Left	Peds	App. Total	Right	Thru	Peds	App. Total	Int. Total
03:30 PM	0	0	0	0	6	1	0	7	3	0	0	3	10
03:45 PM	0	1	0	1	2	0	0	2	5	0	0	5	8
Total	0	1	0	1	8	1	0	9	8	0	0	8	18
04:00 PM	0	0	0	0	2	1	0	3	6	0	0	6	9
04:15 PM	0	0	0	0	2	1	1	4	6	0	0	6	10
04:30 PM	0	1	0	1	4	0	1	5	4	0	0	4	10
04:45 PM	0	2	0	2	2	1	0	3	5	0	0	5	10
Total	0	3	0	3	10	3	2	15	21	0	0	21	39
05:00 PM	0	1	0	1	3	1	1	5	2	0	0	2	8
05:15 PM	0	0	0	0	5	2	0	7	6	0	0	6	13
05:30 PM	0	1	0	1	4	2	2	8	5	0	0	5	14
05:45 PM	0	0	0	0	8	1	0	9	7	0	0	7	16
Total	0	2	0	2	20	6	3	29	20	0	0	20	51
06:00 PM	0	1	0	1	2	0	2	4	5	0	0	5	10
06:15 PM	0	1	0	1	2	1	3	6	3	0	0	3	10
Grand Total	0	8	0	8	42	11	10	63	57	0	0	57	128
Apprch %	0	100	0		66.7	17.5	15.9		100	0	0		
Total %	0	6.2	0	6.2	32.8	8.6	7.8	49.2	44.5	0	0	44.5	

	US 50 Westbound			S Hudson St Northbound			US 50 Eastbound			
Start Time	Thru	Left	App. Total	Right	Left	App. Total	Right	Thru	App. Total	Int. Total
Peak Hour Analysis From 03:30 PM to 06:15 PM - Peak 1 of 1										
Peak Hour for Entire Intersection Begins at 05:15 PM										
05:15 PM	0	0	0	5	**2**	7	6	0	6	13
05:30 PM	0	**1**	**1**	4	2	6	5	0	5	12
05:45 PM	0	0	0	**8**	1	**9**	**7**	0	**7**	**16**
06:00 PM	0	1	1	2	0	2	5	0	5	8
Total Volume	0	2	2	19	5	24	23	0	23	49
% App. Total	0	100		79.2	20.8		100	0		
PHF	.000	.500	.500	.594	.625	.667	.821	.000	.821	.766

Peggy Malone & Associates, Inc.
(888) 247-8602

File Name : 6-Hudson St and US 50 PM
Site Code :
Start Date : 5/29/2019
Page No : 1

Groups Printed- Truck

	US 50 Westbound				S Hudson St Northbound				US 50 Eastbound				
Start Time	Thru	Left	Peds	App. Total	Right	Left	Peds	App. Total	Right	Thru	Peds	App. Total	Int. Total
03:30 PM	0	0	0	0	0	0	0	0	0	0	0	0	0
03:45 PM	0	0	0	0	0	0	0	0	0	0	0	0	0
Total	0	0	0	0	0	0	0	0	0	0	0	0	0
04:00 PM	0	0	0	0	0	0	0	0	0	0	0	0	0
04:15 PM	0	0	0	0	0	0	0	0	0	0	0	0	0
04:30 PM	0	0	0	0	0	0	0	0	0	0	0	0	0
04:45 PM	0	0	0	0	0	0	0	0	0	0	0	0	0
Total	0	0	0	0	0	0	0	0	0	0	0	0	0
05:00 PM	0	0	0	0	0	0	0	0	0	0	0	0	0
05:15 PM	0	0	0	0	0	0	0	0	0	0	0	0	0
05:30 PM	0	0	0	0	0	0	0	0	1	0	0	1	1
05:45 PM	0	0	0	0	0	0	0	0	0	0	0	0	0
Total	0	0	0	0	0	0	0	0	1	0	0	1	1
06:00 PM	0	0	0	0	0	0	0	0	0	0	0	0	0
06:15 PM	0	0	0	0	0	0	0	0	0	0	0	0	0
Grand Total	0	0	0	0	0	0	0	0	1	0	0	1	1
Apprch %	0	0	0		0	0	0		100	0	0		
Total %	0	0	0	0	0	0	0	0	100	0	0	100	

	US 50 Westbound			S Hudson St Northbound			US 50 Eastbound			
Start Time	Thru	Left	App. Total	Right	Left	App. Total	Right	Thru	App. Total	Int. Total
Peak Hour Analysis From 03:30 PM to 06:15 PM - Peak 1 of 1										
Peak Hour for Entire Intersection Begins at 04:45 PM										
04:45 PM	0	0	0	0	0	0	0	0	0	0
05:00 PM	0	0	0	0	0	0	0	0	0	0
05:15 PM	0	0	0	0	0	0	0	0	0	0
05:30 PM	0	0	0	0	0	0	**1**	0	**1**	**1**
Total Volume	0	0	0	0	0	0	1	0	1	1
% App. Total	0	0		0	0		100	0		
PHF	.000	.000	.000	.000	.000	.000	.250	.000	.250	.250

Peggy Malone & Associates, Inc.
(888) 247-8602

File Name : 6-Hudson St and US 50 PM
Site Code :
Start Date : 5/29/2019
Page No : 1

Groups Printed- Bicycles on Crosswalk

	US 50 Westbound				S Hudson St Northbound				US 50 Eastbound				
Start Time	Thru	Left	Peds	App. Total	Right	Left	Peds	App. Total	Right	Thru	Peds	App. Total	Int. Total
03:30 PM	0	0	0	0	0	0	1	1	0	0	0	0	1
03:45 PM	0	0	0	0	0	0	0	0	0	0	0	0	0
Total	0	0	0	0	0	0	1	1	0	0	0	0	1
04:00 PM	0	0	0	0	0	0	0	0	0	0	0	0	0
04:15 PM	0	0	0	0	0	0	0	0	0	0	0	0	0
04:30 PM	0	0	0	0	0	0	0	0	0	0	0	0	0
04:45 PM	0	0	0	0	0	0	0	0	0	0	0	0	0
Total	0	0	0	0	0	0	0	0	0	0	0	0	0
05:00 PM	0	0	0	0	0	0	0	0	0	0	0	0	0
05:15 PM	0	0	0	0	0	0	0	0	0	0	0	0	0
05:30 PM	0	0	0	0	0	0	1	1	0	0	0	0	1
05:45 PM	0	0	0	0	0	0	0	0	0	0	0	0	0
Total	0	0	0	0	0	0	1	1	0	0	0	0	1
06:00 PM	0	0	0	0	0	0	0	0	0	0	0	0	0
06:15 PM	0	0	0	0	0	0	0	0	0	0	0	0	0
Grand Total	0	0	0	0	0	0	2	2	0	0	0	0	2
Apprch %	0	0	0		0	0	100		0	0	0		
Total %	0	0	0	0	0	0	100	100	0	0	0	0	

	US 50 Westbound			S Hudson St Northbound			US 50 Eastbound			
Start Time	Thru	Left	App. Total	Right	Left	App. Total	Right	Thru	App. Total	Int. Total
Peak Hour Analysis From 03:30 PM to 06:15 PM - Peak 1 of 1										
Peak Hour for Entire Intersection Begins at 03:30 PM										
03:30 PM	0	0	0	0	0	0	0	0	0	0
03:45 PM	0	0	0	0	0	0	0	0	0	0
04:00 PM	0	0	0	0	0	0	0	0	0	0
04:15 PM	0	0	0	0	0	0	0	0	0	0
Total Volume	0	0	0	0	0	0	0	0	0	0
% App. Total	0	0		0	0		0	0		
PHF	.000	.000	.000	.000	.000	.000	.000	.000	.000	.000

Peggy Malone & Associates, Inc.

(888) 247-8602

File Name : 6-Hudson St and US 50 PM
Site Code :
Start Date : 5/29/2019
Page No : 1

Groups Printed- Combined

	US 50 Westbound				S Hudson St Northbound				US 50 Eastbound				
Start Time	Thru	Left	Peds	App. Total	Right	Left	Peds	App. Total	Right	Thru	Peds	App. Total	Int. Total
03:30 PM	0	0	0	0	6	1	1	8	3	0	0	3	11
03:45 PM	0	1	0	1	2	0	0	2	5	0	0	5	8
Total	0	1	0	1	8	1	1	10	8	0	0	8	19
04:00 PM	0	0	0	0	2	1	0	3	6	0	0	6	9
04:15 PM	0	0	0	0	2	1	1	4	6	0	0	6	10
04:30 PM	0	1	0	1	4	0	1	5	4	0	0	4	10
04:45 PM	0	2	0	2	2	1	0	3	5	0	0	5	10
Total	0	3	0	3	10	3	2	15	21	0	0	21	39
05:00 PM	0	1	0	1	3	1	1	5	2	0	0	2	8
05:15 PM	0	0	0	0	5	2	0	7	6	0	0	6	13
05:30 PM	0	1	0	1	4	2	3	9	6	0	0	6	16
05:45 PM	0	0	0	0	8	1	0	9	7	0	0	7	16
Total	0	2	0	2	20	6	4	30	21	0	0	21	53
06:00 PM	0	1	0	1	2	0	2	4	5	0	0	5	10
06:15 PM	0	1	0	1	2	1	3	6	3	0	0	3	10
Grand Total	0	8	0	8	42	11	12	65	58	0	0	58	131
Apprch %	0	100	0		64.6	16.9	18.5		100	0	0		
Total %	0	6.1	0	6.1	32.1	8.4	9.2	49.6	44.3	0	0	44.3	

	US 50 Westbound			S Hudson St Northbound			US 50 Eastbound			
Start Time	Thru	Left	App. Total	Right	Left	App. Total	Right	Thru	App. Total	Int. Total
Peak Hour Analysis From 03:30 PM to 06:15 PM - Peak 1 of 1										
Peak Hour for Entire Intersection Begins at 05:15 PM										
05:15 PM	0	0	0	5	**2**	7	6	0	6	13
05:30 PM	0	**1**	**1**	4	2	6	6	0	6	13
05:45 PM	0	0	0	**8**	1	**9**	**7**	0	**7**	**16**
06:00 PM	0	1	1	2	0	2	5	0	5	8
Total Volume	0	2	2	19	5	24	24	0	24	50
% App. Total	0	100		79.2	20.8		100	0		
PHF	.000	.500	.500	.594	.625	.667	.857	.000	.857	.781

Peggy Malone & Associates, Inc.

(888) 247-8602

File Name : 7-Highland St and US 50 AM
Site Code :
Start Date : 5/29/2019
Page No : 1

Groups Printed- Car

	N Highland Southbound					US 50 Westbound					S Highland Northbound					US 50 Eastbound					
Start Time	Right	Thru	Left	Peds	App. Total	Right	Thru	Left	Peds	App. Total	Right	Thru	Left	Peds	App. Total	Right	Thru	Left	Peds	App. Total	Int. Total
06:30 AM	3	0	0	0	3	0	0	0	0	0	1	0	0	4	5	0	0	0	0	0	8
06:45 AM	2	0	0	0	2	0	0	0	0	0	1	0	0	0	1	0	0	2	0	2	5
Total	5	0	0	0	5	0	0	0	0	0	2	0	0	4	6	0	0	2	0	2	13
07:00 AM	4	0	0	1	5	0	0	0	0	0	1	0	0	0	1	1	0	0	0	1	7
07:15 AM	3	0	0	0	3	3	0	0	0	3	2	0	0	0	2	0	0	0	0	0	8
07:30 AM	5	0	1	0	6	1	0	0	0	1	5	0	0	0	5	4	0	0	0	4	16
07:45 AM	7	0	0	1	8	1	0	0	0	1	9	0	0	0	9	1	0	7	0	8	26
Total	19	0	1	2	22	5	0	0	0	5	17	0	0	0	17	6	0	7	0	13	57
08:00 AM	4	0	0	1	5	0	0	0	0	0	19	0	0	0	19	0	0	5	0	5	29
08:15 AM	10	0	0	2	12	1	0	0	0	1	20	0	1	0	21	0	0	1	0	1	35
08:30 AM	8	0	0	3	11	2	0	0	0	2	15	0	0	0	15	0	0	5	0	5	33
08:45 AM	4	0	0	0	4	1	0	0	0	1	6	0	0	0	6	0	0	4	0	4	15
Total	26	0	0	6	32	4	0	0	0	4	60	0	1	0	61	0	0	15	0	15	112
09:00 AM	2	0	0	4	6	1	0	0	0	1	4	0	0	0	4	2	0	2	0	4	15
09:15 AM	6	0	1	1	8	2	0	0	0	2	2	0	0	1	3	0	0	9	0	9	22
Grand Total	58	0	2	13	73	12	0	0	0	12	85	0	1	5	91	8	0	35	0	43	219
Apprch %	79.5	0	2.7	17.8		100	0	0	0		93.4	0	1.1	5.5		18.6	0	81.4	0		
Total %	26.5	0	0.9	5.9	33.3	5.5	0	0	0	5.5	38.8	0	0.5	2.3	41.6	3.7	0	16	0	19.6	

	N Highland Southbound				US 50 Westbound				S Highland Northbound				US 50 Eastbound				
Start Time	Right	Thru	Left	App. Total	Right	Thru	Left	App. Total	Right	Thru	Left	App. Total	Right	Thru	Left	App. Total	Int. Total
Peak Hour Analysis From 06:30 AM to 09:15 AM - Peak 1 of 1																	
Peak Hour for Entire Intersection Begins at 07:45 AM																	
07:45 AM	7	0	0	7	1	0	0	1	9	0	0	9	**1**	0	**7**	**8**	25
08:00 AM	4	0	0	4	0	0	0	0	19	0	0	19	0	0	5	5	28
08:15 AM	**10**	0	0	**10**	1	0	0	1	**20**	0	**1**	**21**	0	0	1	1	**33**
08:30 AM	8	0	0	8	**2**	0	0	**2**	15	0	0	15	0	0	5	5	30
Total Volume	29	0	0	29	4	0	0	4	63	0	1	64	1	0	18	19	116
% App. Total	100	0	0		100	0	0		98.4	0	1.6		5.3	0	94.7		
PHF	.725	.000	.000	.725	.500	.000	.000	.500	.788	.000	.250	.762	.250	.000	.643	.594	.879

Peggy Malone & Associates, Inc.

(888) 247-8602

File Name : 7-Highland St and US 50 AM
Site Code :
Start Date : 5/29/2019
Page No : 1

Groups Printed- Truck

	N Highland Southbound					US 50 Westbound					S Highland Northbound					US 50 Eastbound					
Start Time	Right	Thru	Left	Peds	App. Total	Right	Thru	Left	Peds	App. Total	Right	Thru	Left	Peds	App. Total	Right	Thru	Left	Peds	App. Total	Int. Total
06:30 AM	0	0	0	0	0	0	0	0	0	0	0	0	0	0	0	0	0	0	0	0	0
06:45 AM	0	0	0	0	0	0	0	0	0	0	0	0	0	0	0	0	0	0	0	0	0
Total	0	0	0	0	0	0	0	0	0	0	0	0	0	0	0	0	0	0	0	0	0
07:00 AM	0	0	0	0	0	0	0	0	0	0	0	0	0	0	0	0	0	0	0	0	0
07:15 AM	0	0	0	0	0	0	0	0	0	0	0	0	0	0	0	0	0	1	0	1	1
07:30 AM	0	0	0	0	0	0	0	0	0	0	0	0	0	0	0	0	0	0	0	0	0
07:45 AM	0	0	0	0	0	0	0	0	0	0	0	0	0	0	0	0	0	0	0	0	0
Total	0	0	0	0	0	0	0	0	0	0	0	0	0	0	0	0	0	1	0	1	1
08:00 AM	0	0	0	0	0	1	0	0	0	1	0	0	0	0	0	0	0	0	0	0	1
08:15 AM	0	0	0	0	0	0	0	0	0	0	0	0	0	0	0	0	0	0	0	0	0
08:30 AM	0	0	0	0	0	0	0	0	0	0	0	0	0	0	0	0	0	0	0	0	0
08:45 AM	0	0	0	0	0	0	0	0	0	0	0	0	0	0	0	0	0	0	0	0	0
Total	0	0	0	0	0	1	0	0	0	1	0	0	0	0	0	0	0	0	0	0	1
09:00 AM	0	0	0	0	0	0	0	0	0	0	0	0	0	0	0	0	0	0	0	0	0
09:15 AM	1	0	0	0	1	0	0	0	0	0	0	0	0	0	0	0	0	0	0	0	1
Grand Total	1	0	0	0	1	1	0	0	0	1	0	0	0	0	0	0	0	1	0	1	3
Apprch %	100	0	0	0		100	0	0	0		0	0	0	0		0	0	100	0		
Total %	33.3	0	0	0	33.3	33.3	0	0	0	33.3	0	0	0	0	0	0	0	33.3	0	33.3	

	N Highland Southbound				US 50 Westbound				S Highland Northbound				US 50 Eastbound				
Start Time	Right	Thru	Left	App. Total	Right	Thru	Left	App. Total	Right	Thru	Left	App. Total	Right	Thru	Left	App. Total	Int. Total
Peak Hour Analysis From 06:30 AM to 09:15 AM - Peak 1 of 1																	
Peak Hour for Entire Intersection Begins at 07:15 AM																	
07:15 AM	0	0	0	0	0	0	0	0	0	0	0	0	0	0	**1**	**1**	**1**
07:30 AM	0	0	0	0	0	0	0	0	0	0	0	0	0	0	0	0	0
07:45 AM	0	0	0	0	0	0	0	0	0	0	0	0	0	0	0	0	0
08:00 AM	0	0	0	0	**1**	0	0	**1**	0	0	0	0	0	0	0	0	1
Total Volume	0	0	0	0	1	0	0	1	0	0	0	0	0	0	1	1	2
% App. Total	0	0	0		100	0	0		0	0	0		0	0	100		
PHF	.000	.000	.000	.000	.250	.000	.000	.250	.000	.000	.000	.000	.000	.000	.250	.250	.500

Peggy Malone & Associates, Inc.

(888) 247-8602

File Name : 7-Highland St and US 50 AM
Site Code :
Start Date : 5/29/2019
Page No : 1

Groups Printed- Bicycles on Crosswalk

	N Highland Southbound					US 50 Westbound					S Highland Northbound					US 50 Eastbound					
Start Time	Right	Thru	Left	Peds	App. Total	Right	Thru	Left	Peds	App. Total	Right	Thru	Left	Peds	App. Total	Right	Thru	Left	Peds	App. Total	Int. Total
06:30 AM	0	0	0	0	0	0	0	0	0	0	0	0	0	0	0	0	0	0	0	0	0
06:45 AM	0	0	0	0	0	0	0	0	0	0	0	0	0	0	0	0	0	0	0	0	0
Total	0	0	0	0	0	0	0	0	0	0	0	0	0	0	0	0	0	0	0	0	0
07:00 AM	0	0	0	0	0	0	0	0	0	0	0	0	0	0	0	0	0	0	0	0	0
07:15 AM	0	0	0	0	0	0	0	0	0	0	0	0	0	0	0	0	0	0	0	0	0
07:30 AM	0	0	0	0	0	0	0	0	0	0	0	0	0	0	0	0	0	0	0	0	0
07:45 AM	0	0	0	0	0	0	0	0	0	0	0	0	0	0	0	0	0	0	0	0	0
Total	0	0	0	0	0	0	0	0	0	0	0	0	0	0	0	0	0	0	0	0	0
08:00 AM	0	0	0	1	1	0	0	0	0	0	0	0	0	0	0	0	0	0	1	1	2
08:15 AM	0	0	0	1	1	0	0	0	0	0	0	0	0	0	0	0	0	0	0	0	1
08:30 AM	0	0	0	3	3	0	0	0	0	0	0	0	0	0	0	0	0	0	0	0	3
08:45 AM	0	0	0	1	1	0	0	0	0	0	0	0	0	0	0	0	0	0	0	0	1
Total	0	0	0	6	6	0	0	0	0	0	0	0	0	0	0	0	0	0	1	1	7
09:00 AM	0	0	0	1	1	0	0	0	0	0	0	0	0	0	0	0	0	0	0	0	1
09:15 AM	0	0	0	0	0	0	0	0	0	0	0	0	0	1	1	0	0	0	0	0	1
Grand Total	0	0	0	7	7	0	0	0	0	0	0	0	0	1	1	0	0	0	1	1	9
Apprch %	0	0	0	100		0	0	0	0		0	0	0	100		0	0	0	100		
Total %	0	0	0	77.8	77.8	0	0	0	0	0	0	0	0	11.1	11.1	0	0	0	11.1	11.1	

	N Highland Southbound				US 50 Westbound				S Highland Northbound				US 50 Eastbound				
Start Time	Right	Thru	Left	App. Total	Right	Thru	Left	App. Total	Right	Thru	Left	App. Total	Right	Thru	Left	App. Total	Int. Total
Peak Hour Analysis From 06:30 AM to 09:15 AM - Peak 1 of 1																	
Peak Hour for Entire Intersection Begins at 06:30 AM																	
06:30 AM	0	0	0	0	0	0	0	0	0	0	0	0	0	0	0	0	0
06:45 AM	0	0	0	0	0	0	0	0	0	0	0	0	0	0	0	0	0
07:00 AM	0	0	0	0	0	0	0	0	0	0	0	0	0	0	0	0	0
07:15 AM	0	0	0	0	0	0	0	0	0	0	0	0	0	0	0	0	0
Total Volume	0	0	0	0	0	0	0	0	0	0	0	0	0	0	0	0	0
% App. Total	0	0	0		0	0	0		0	0	0		0	0	0		
PHF	.000	.000	.000	.000	.000	.000	.000	.000	.000	.000	.000	.000	.000	.000	.000	.000	.000

Peggy Malone & Associates, Inc.

(888) 247-8602

File Name : 7-Highland St and US 50 AM
Site Code :
Start Date : 5/29/2019
Page No : 1

Groups Printed- Combined

	N Highland Southbound					US 50 Westbound					S Highland Northbound					US 50 Eastbound					
Start Time	Right	Thru	Left	Peds	App. Total	Right	Thru	Left	Peds	App. Total	Right	Thru	Left	Peds	App. Total	Right	Thru	Left	Peds	App. Total	Int. Total
06:30 AM	3	0	0	0	3	0	0	0	0	0	1	0	0	4	5	0	0	0	0	0	8
06:45 AM	2	0	0	0	2	0	0	0	0	0	1	0	0	0	1	0	0	2	0	2	5
Total	5	0	0	0	5	0	0	0	0	0	2	0	0	4	6	0	0	2	0	2	13
07:00 AM	4	0	0	1	5	0	0	0	0	0	1	0	0	0	1	1	0	0	0	1	7
07:15 AM	3	0	0	0	3	3	0	0	0	3	2	0	0	0	2	0	0	1	0	1	9
07:30 AM	5	0	1	0	6	1	0	0	0	1	5	0	0	0	5	4	0	0	0	4	16
07:45 AM	7	0	0	1	8	1	0	0	0	1	9	0	0	0	9	1	0	7	0	8	26
Total	19	0	1	2	22	5	0	0	0	5	17	0	0	0	17	6	0	8	0	14	58
08:00 AM	4	0	0	2	6	1	0	0	0	1	19	0	0	0	19	0	0	5	1	6	32
08:15 AM	10	0	0	3	13	1	0	0	0	1	20	0	1	0	21	0	0	1	0	1	36
08:30 AM	8	0	0	6	14	2	0	0	0	2	15	0	0	0	15	0	0	5	0	5	36
08:45 AM	4	0	0	1	5	1	0	0	0	1	6	0	0	0	6	0	0	4	0	4	16
Total	26	0	0	12	38	5	0	0	0	5	60	0	1	0	61	0	0	15	1	16	120
09:00 AM	2	0	0	5	7	1	0	0	0	1	4	0	0	0	4	2	0	2	0	4	16
09:15 AM	7	0	1	1	9	2	0	0	0	2	2	0	0	2	4	0	0	9	0	9	24
Grand Total	59	0	2	20	81	13	0	0	0	13	85	0	1	6	92	8	0	36	1	45	231
Apprch %	72.8	0	2.5	24.7		100	0	0	0		92.4	0	1.1	6.5		17.8	0	80	2.2		
Total %	25.5	0	0.9	8.7	35.1	5.6	0	0	0	5.6	36.8	0	0.4	2.6	39.8	3.5	0	15.6	0.4	19.5	

	N Highland Southbound				US 50 Westbound				S Highland Northbound				US 50 Eastbound				
Start Time	Right	Thru	Left	App. Total	Right	Thru	Left	App. Total	Right	Thru	Left	App. Total	Right	Thru	Left	App. Total	Int. Total
Peak Hour Analysis From 06:30 AM to 09:15 AM - Peak 1 of 1																	
Peak Hour for Entire Intersection Begins at 07:45 AM																	
07:45 AM	7	0	0	7	1	0	0	1	9	0	0	9	**1**	0	**7**	**8**	25
08:00 AM	4	0	0	4	1	0	0	1	19	0	0	19	0	0	5	5	29
08:15 AM	**10**	0	0	**10**	1	0	0	1	**20**	0	**1**	**21**	0	0	1	1	**33**
08:30 AM	8	0	0	8	**2**	0	0	**2**	15	0	0	15	0	0	5	5	30
Total Volume	29	0	0	29	5	0	0	5	63	0	1	64	1	0	18	19	117
% App. Total	100	0	0		100	0	0		98.4	0	1.6		5.3	0	94.7		
PHF	.725	.000	.000	.725	.625	.000	.000	.625	.788	.000	.250	.762	.250	.000	.643	.594	.886

Peggy Malone & Associates, Inc.

(888) 247-8602

File Name : 7-Highland St and US 50 PM
Site Code :
Start Date : 5/29/2019
Page No : 1

Groups Printed- Car

	N Highland Southbound					US 50 Westbound					S Highland Northbound					US 50 Eastbound					
Start Time	Right	Thru	Left	Peds	App. Total	Right	Thru	Left	Peds	App. Total	Right	Thru	Left	Peds	App. Total	Right	Thru	Left	Peds	App. Total	Int. Total
03:30 PM	7	0	0	0	7	2	0	0	0	2	0	0	0	0	0	1	0	3	0	4	13
03:45 PM	17	0	0	0	17	1	0	1	0	2	1	0	0	1	2	3	0	7	0	10	31
Total	24	0	0	0	24	3	0	1	0	4	1	0	0	1	2	4	0	10	0	14	44
04:00 PM	9	0	1	0	10	1	0	0	0	1	2	0	0	0	2	0	0	4	0	4	17
04:15 PM	15	0	0	0	15	1	0	0	0	1	2	0	0	0	2	0	0	3	0	3	21
04:30 PM	14	0	0	0	14	1	0	0	0	1	0	0	0	1	1	1	0	5	0	6	22
04:45 PM	17	0	0	0	17	0	0	0	0	0	0	0	0	0	0	2	0	5	0	7	24
Total	55	0	1	0	56	3	0	0	0	3	4	0	0	1	5	3	0	17	0	20	84
05:00 PM	18	0	1	0	19	0	0	1	0	1	1	0	0	1	2	1	0	8	0	9	31
05:15 PM	10	0	2	1	13	0	0	0	0	0	2	0	0	0	2	2	0	2	0	4	19
05:30 PM	25	0	1	0	26	0	0	0	0	0	1	0	0	1	2	0	0	8	0	8	36
05:45 PM	10	0	3	1	14	2	0	1	0	3	1	0	0	0	1	2	0	6	0	8	26
Total	63	0	7	2	72	2	0	2	0	4	5	0	0	2	7	5	0	24	0	29	112
06:00 PM	17	0	0	2	19	2	0	0	0	2	0	0	0	0	0	1	0	9	0	10	31
06:15 PM	5	0	0	4	9	1	0	0	0	1	0	0	0	0	0	3	0	6	0	9	19
Grand Total	164	0	8	8	180	11	0	3	0	14	10	0	0	4	14	16	0	66	0	82	290
Apprch %	91.1	0	4.4	4.4		78.6	0	21.4	0		71.4	0	0	28.6		19.5	0	80.5	0		
Total %	56.6	0	2.8	2.8	62.1	3.8	0	1	0	4.8	3.4	0	0	1.4	4.8	5.5	0	22.8	0	28.3	

	N Highland Southbound				US 50 Westbound				S Highland Northbound				US 50 Eastbound				
Start Time	Right	Thru	Left	App. Total	Right	Thru	Left	App. Total	Right	Thru	Left	App. Total	Right	Thru	Left	App. Total	Int. Total
Peak Hour Analysis From 03:30 PM to 06:15 PM - Peak 1 of 1																	
Peak Hour for Entire Intersection Begins at 05:00 PM																	
05:00 PM	18	0	1	19	0	0	**1**	1	1	0	0	1	1	0	**8**	**9**	30
05:15 PM	10	0	2	12	0	0	0	0	**2**	0	0	**2**	**2**	0	2	4	18
05:30 PM	**25**	0	1	**26**	0	0	0	0	1	0	0	1	0	0	8	8	**35**
05:45 PM	10	0	**3**	13	**2**	0	1	**3**	1	0	0	1	2	0	6	8	25
Total Volume	63	0	7	70	2	0	2	4	5	0	0	5	5	0	24	29	108
% App. Total	90	0	10		50	0	50		100	0	0		17.2	0	82.8		
PHF	.630	.000	.583	.673	.250	.000	.500	.333	.625	.000	.000	.625	.625	.000	.750	.806	.771

Peggy Malone & Associates, Inc.

(888) 247-8602

File Name : 7-Highland St and US 50 PM
Site Code :
Start Date : 5/29/2019
Page No : 1

Groups Printed- Truck

	N Highland Southbound					US 50 Westbound					S Highland Northbound					US 50 Eastbound					
Start Time	Right	Thru	Left	Peds	App. Total	Right	Thru	Left	Peds	App. Total	Right	Thru	Left	Peds	App. Total	Right	Thru	Left	Peds	App. Total	Int. Total
03:30 PM	0	0	0	0	0	0	0	0	0	0	0	0	0	0	0	0	0	0	0	0	0
03:45 PM	0	0	0	0	0	1	0	1	0	2	1	0	0	0	1	0	0	0	0	0	3
Total	0	0	0	0	0	1	0	1	0	2	1	0	0	0	1	0	0	0	0	0	3
04:00 PM	0	0	0	0	0	0	0	0	0	0	1	0	0	0	1	0	0	0	0	0	1
04:15 PM	0	0	0	0	0	0	0	0	0	0	0	0	0	0	0	0	0	0	0	0	0
04:30 PM	0	0	0	0	0	0	0	0	0	0	0	0	0	0	0	0	0	0	0	0	0
04:45 PM	0	0	0	0	0	0	0	0	0	0	0	0	0	0	0	0	0	0	0	0	0
Total	0	0	0	0	0	0	0	0	0	0	1	0	0	0	1	0	0	0	0	0	1
05:00 PM	0	0	0	0	0	0	0	0	0	0	0	0	0	0	0	0	0	0	0	0	0
05:15 PM	0	0	0	0	0	0	0	0	0	0	0	0	0	0	0	0	0	0	0	0	0
05:30 PM	0	0	0	0	0	0	0	0	0	0	0	0	0	0	0	0	0	0	0	0	0
05:45 PM	0	0	0	0	0	0	0	0	0	0	0	0	0	0	0	0	0	0	0	0	0
Total	0	0	0	0	0	0	0	0	0	0	0	0	0	0	0	0	0	0	0	0	0
06:00 PM	0	0	0	0	0	0	0	0	0	0	0	0	0	0	0	0	0	0	0	0	0
06:15 PM	0	0	0	0	0	0	0	0	0	0	0	0	0	0	0	0	0	0	0	0	0
Grand Total	0	0	0	0	0	1	0	1	0	2	2	0	0	0	2	0	0	0	0	0	4
Apprch %	0	0	0	0		50	0	50	0		100	0	0	0		0	0	0	0		
Total %	0	0	0	0	0	25	0	25	0	50	50	0	0	0	50	0	0	0	0	0	

	N Highland Southbound				US 50 Westbound				S Highland Northbound				US 50 Eastbound				
Start Time	Right	Thru	Left	App. Total	Right	Thru	Left	App. Total	Right	Thru	Left	App. Total	Right	Thru	Left	App. Total	Int. Total
Peak Hour Analysis From 03:30 PM to 06:15 PM - Peak 1 of 1																	
Peak Hour for Entire Intersection Begins at 03:30 PM																	
03:30 PM	0	0	0	0	0	0	0	0	0	0	0	0	0	0	0	0	0
03:45 PM	0	0	0	0	**1**	0	**1**	**2**	**1**	0	0	**1**	0	0	0	0	**3**
04:00 PM	0	0	0	0	0	0	0	0	1	0	0	1	0	0	0	0	1
04:15 PM	0	0	0	0	0	0	0	0	0	0	0	0	0	0	0	0	0
Total Volume	0	0	0	0	1	0	1	2	2	0	0	2	0	0	0	0	4
% App. Total	0	0	0		50	0	50		100	0	0		0	0	0		
PHF	.000	.000	.000	.000	.250	.000	.250	.250	.500	.000	.000	.500	.000	.000	.000	.000	.333

Peggy Malone & Associates, Inc.

(888) 247-8602

File Name : 7-Highland St and US 50 PM
Site Code :
Start Date : 5/29/2019
Page No : 1

Groups Printed- Bicycles on Crosswalk

	N Highland Southbound					US 50 Westbound					S Highland Northbound					US 50 Eastbound					
Start Time	Right	Thru	Left	Peds	App. Total	Right	Thru	Left	Peds	App. Total	Right	Thru	Left	Peds	App. Total	Right	Thru	Left	Peds	App. Total	Int. Total
03:30 PM	0	0	0	0	0	0	0	0	0	0	0	0	0	0	0	0	0	0	0	0	0
03:45 PM	0	0	0	0	0	0	0	0	0	0	0	0	0	0	0	0	0	0	0	0	0
Total	0	0	0	0	0	0	0	0	0	0	0	0	0	0	0	0	0	0	0	0	0
04:00 PM	0	0	0	0	0	0	0	0	0	0	0	0	0	0	0	0	0	0	0	0	0
04:15 PM	0	0	0	0	0	0	0	0	0	0	0	0	0	0	0	0	0	0	0	0	0
04:30 PM	0	0	0	0	0	0	0	0	0	0	0	0	0	0	0	0	0	0	0	0	0
04:45 PM	0	0	0	0	0	0	0	0	0	0	0	0	0	0	0	0	0	0	0	0	0
Total	0	0	0	0	0	0	0	0	0	0	0	0	0	0	0	0	0	0	0	0	0
05:00 PM	0	0	0	0	0	0	0	0	0	0	0	0	0	0	0	0	0	0	0	0	0
05:15 PM	0	0	0	3	3	0	0	0	0	0	0	0	0	0	0	0	0	0	0	0	3
05:30 PM	0	0	0	0	0	0	0	0	0	0	0	0	0	1	1	0	0	0	0	0	1
05:45 PM	0	0	0	0	0	0	0	0	0	0	0	0	0	0	0	0	0	0	0	0	0
Total	0	0	0	3	3	0	0	0	0	0	0	0	0	1	1	0	0	0	0	0	4
06:00 PM	0	0	0	2	2	0	0	0	0	0	0	0	0	0	0	0	0	0	0	0	2
06:15 PM	0	0	0	1	1	0	0	0	0	0	0	0	0	0	0	0	0	0	0	0	1
Grand Total	0	0	0	6	6	0	0	0	0	0	0	0	0	1	1	0	0	0	0	0	7
Apprch %	0	0	0	100		0	0	0	0		0	0	0	100		0	0	0	0		
Total %	0	0	0	85.7	85.7	0	0	0	0	0	0	0	0	14.3	14.3	0	0	0	0	0	

	N Highland Southbound				US 50 Westbound				S Highland Northbound				US 50 Eastbound				
Start Time	Right	Thru	Left	App. Total	Right	Thru	Left	App. Total	Right	Thru	Left	App. Total	Right	Thru	Left	App. Total	Int. Total
Peak Hour Analysis From 03:30 PM to 06:15 PM - Peak 1 of 1																	
Peak Hour for Entire Intersection Begins at 03:30 PM																	
03:30 PM	0	0	0	0	0	0	0	0	0	0	0	0	0	0	0	0	0
03:45 PM	0	0	0	0	0	0	0	0	0	0	0	0	0	0	0	0	0
04:00 PM	0	0	0	0	0	0	0	0	0	0	0	0	0	0	0	0	0
04:15 PM	0	0	0	0	0	0	0	0	0	0	0	0	0	0	0	0	0
Total Volume	0	0	0	0	0	0	0	0	0	0	0	0	0	0	0	0	0
% App. Total	0	0	0		0	0	0		0	0	0		0	0	0		
PHF	.000	.000	.000	.000	.000	.000	.000	.000	.000	.000	.000	.000	.000	.000	.000	.000	.000

Peggy Malone & Associates, Inc.

(888) 247-8602

File Name : 7-Highland St and US 50 PM
Site Code :
Start Date : 5/29/2019
Page No : 1

Groups Printed- Combined

	N Highland Southbound					US 50 Westbound					S Highland Northbound					US 50 Eastbound					
Start Time	Right	Thru	Left	Peds	App. Total	Right	Thru	Left	Peds	App. Total	Right	Thru	Left	Peds	App. Total	Right	Thru	Left	Peds	App. Total	Int. Total
03:30 PM	7	0	0	0	7	2	0	0	0	2	0	0	0	0	0	1	0	3	0	4	13
03:45 PM	17	0	0	0	17	2	0	2	0	4	2	0	0	1	3	3	0	7	0	10	34
Total	24	0	0	0	24	4	0	2	0	6	2	0	0	1	3	4	0	10	0	14	47
04:00 PM	9	0	1	0	10	1	0	0	0	1	3	0	0	0	3	0	0	4	0	4	18
04:15 PM	15	0	0	0	15	1	0	0	0	1	2	0	0	0	2	0	0	3	0	3	21
04:30 PM	14	0	0	0	14	1	0	0	0	1	0	0	0	1	1	1	0	5	0	6	22
04:45 PM	17	0	0	0	17	0	0	0	0	0	0	0	0	0	0	2	0	5	0	7	24
Total	55	0	1	0	56	3	0	0	0	3	5	0	0	1	6	3	0	17	0	20	85
05:00 PM	18	0	1	0	19	0	0	1	0	1	1	0	0	1	2	1	0	8	0	9	31
05:15 PM	10	0	2	4	16	0	0	0	0	0	2	0	0	0	2	2	0	2	0	4	22
05:30 PM	25	0	1	0	26	0	0	0	0	0	1	0	0	2	3	0	0	8	0	8	37
05:45 PM	10	0	3	1	14	2	0	1	0	3	1	0	0	0	1	2	0	6	0	8	26
Total	63	0	7	5	75	2	0	2	0	4	5	0	0	3	8	5	0	24	0	29	116
06:00 PM	17	0	0	4	21	2	0	0	0	2	0	0	0	0	0	1	0	9	0	10	33
06:15 PM	5	0	0	5	10	1	0	0	0	1	0	0	0	0	0	3	0	6	0	9	20
Grand Total	164	0	8	14	186	12	0	4	0	16	12	0	0	5	17	16	0	66	0	82	301
Apprch %	88.2	0	4.3	7.5		75	0	25	0		70.6	0	0	29.4		19.5	0	80.5	0		
Total %	54.5	0	2.7	4.7	61.8	4	0	1.3	0	5.3	4	0	0	1.7	5.6	5.3	0	21.9	0	27.2	

	N Highland Southbound				US 50 Westbound				S Highland Northbound				US 50 Eastbound				
Start Time	Right	Thru	Left	App. Total	Right	Thru	Left	App. Total	Right	Thru	Left	App. Total	Right	Thru	Left	App. Total	Int. Total
Peak Hour Analysis From 03:30 PM to 06:15 PM - Peak 1 of 1																	
Peak Hour for Entire Intersection Begins at 05:00 PM																	
05:00 PM	18	0	1	19	0	0	**1**	1	1	0	0	1	1	0	**8**	**9**	30
05:15 PM	10	0	2	12	0	0	0	0	**2**	0	0	**2**	**2**	0	2	4	18
05:30 PM	**25**	0	1	**26**	0	0	0	0	1	0	0	1	0	0	8	8	**35**
05:45 PM	10	0	**3**	13	**2**	0	1	**3**	1	0	0	1	2	0	6	8	25
Total Volume	63	0	7	70	2	0	2	4	5	0	0	5	5	0	24	29	108
% App. Total	90	0	10		50	0	50		100	0	0		17.2	0	82.8		
PHF	.630	.000	.583	.673	.250	.000	.500	.333	.625	.000	.000	.625	.625	.000	.750	.806	.771

Peggy Malone & Associates, Inc.

(888) 247-8602

File Name : 8-Garfield St and US 50 AM
Site Code :
Start Date : 5/29/2019
Page No : 1

Groups Printed- Car

	N Garfield Southbound					US 50 Westbound					S Garfield Northbound					US 50 Eastbound					
Start Time	Right	Thru	Left	Peds	App. Total	Right	Thru	Left	Peds	App. Total	Right	Thru	Left	Peds	App. Total	Right	Thru	Left	Peds	App. Total	Int. Total
06:30 AM	0	0	0	1	1	0	0	0	0	0	0	0	0	4	4	0	0	0	0	0	5
06:45 AM	0	0	0	4	4	0	0	0	0	0	2	0	0	0	2	0	0	0	0	0	6
Total	0	0	0	5	5	0	0	0	0	0	2	0	0	4	6	0	0	0	0	0	11
07:00 AM	0	0	1	3	4	0	0	0	0	0	2	0	0	1	3	0	0	0	0	0	7
07:15 AM	1	0	0	4	5	0	0	0	0	0	7	0	0	5	12	0	0	1	0	1	18
07:30 AM	1	0	0	5	6	0	0	0	0	0	10	0	0	1	11	0	0	1	0	1	18
07:45 AM	1	0	0	2	3	0	0	0	0	0	16	0	1	1	18	1	0	0	0	1	22
Total	3	0	1	14	18	0	0	0	0	0	35	0	1	8	44	1	0	2	0	3	65
08:00 AM	2	0	0	7	9	0	0	0	0	0	15	0	0	1	16	1	0	0	0	1	26
08:15 AM	6	0	0	5	11	1	0	0	0	1	30	0	1	3	34	1	0	1	0	2	48
08:30 AM	1	0	0	5	6	0	0	0	0	0	14	0	1	3	18	0	0	0	0	0	24
08:45 AM	0	0	0	2	2	0	0	0	0	0	10	0	0	3	13	1	0	2	0	3	18
Total	9	0	0	19	28	1	0	0	0	1	69	0	2	10	81	3	0	3	0	6	116
09:00 AM	0	0	0	4	4	0	0	0	0	0	7	0	0	3	10	0	0	2	0	2	16
09:15 AM	1	0	1	1	3	0	0	0	0	0	7	0	1	5	13	9	0	1	0	10	26
Grand Total	13	0	2	43	58	1	0	0	0	1	120	0	4	30	154	13	0	8	0	21	234
Apprch %	22.4	0	3.4	74.1		100	0	0	0		77.9	0	2.6	19.5		61.9	0	38.1	0		
Total %	5.6	0	0.9	18.4	24.8	0.4	0	0	0	0.4	51.3	0	1.7	12.8	65.8	5.6	0	3.4	0	9	

	N Garfield Southbound				US 50 Westbound				S Garfield Northbound				US 50 Eastbound				
Start Time	Right	Thru	Left	App. Total	Right	Thru	Left	App. Total	Right	Thru	Left	App. Total	Right	Thru	Left	App. Total	Int. Total
Peak Hour Analysis From 06:30 AM to 09:15 AM - Peak 1 of 1																	
Peak Hour for Entire Intersection Begins at 07:45 AM																	
07:45 AM	1	0	0	1	0	0	0	0	16	0	**1**	17	**1**	0	0	1	19
08:00 AM	2	0	0	2	0	0	0	0	15	0	0	15	1	0	0	1	18
08:15 AM	**6**	0	0	**6**	**1**	0	0	**1**	**30**	0	1	**31**	1	0	**1**	**2**	**40**
08:30 AM	1	0	0	1	0	0	0	0	14	0	1	15	0	0	0	0	16
Total Volume	10	0	0	10	1	0	0	1	75	0	3	78	3	0	1	4	93
% App. Total	100	0	0		100	0	0		96.2	0	3.8		75	0	25		
PHF	.417	.000	.000	.417	.250	.000	.000	.250	.625	.000	.750	.629	.750	.000	.250	.500	.581

Peggy Malone & Associates, Inc.

(888) 247-8602

File Name : 8-Garfield St and US 50 AM
Site Code :
Start Date : 5/29/2019
Page No : 1

Groups Printed- Truck

	N Garfield Southbound					US 50 Westbound					S Garfield Northbound					US 50 Eastbound					
Start Time	Right	Thru	Left	Peds	App. Total	Right	Thru	Left	Peds	App. Total	Right	Thru	Left	Peds	App. Total	Right	Thru	Left	Peds	App. Total	Int. Total
06:30 AM	0	0	0	0	0	0	0	0	0	0	0	0	0	0	0	0	0	0	0	0	0
06:45 AM	0	0	0	0	0	0	0	0	0	0	0	0	0	0	0	0	0	0	0	0	0
Total	0	0	0	0	0	0	0	0	0	0	0	0	0	0	0	0	0	0	0	0	0
07:00 AM	0	0	0	0	0	0	0	0	0	0	0	0	0	0	0	0	0	0	0	0	0
07:15 AM	0	0	0	0	0	0	0	0	0	0	0	0	0	0	0	0	0	0	0	0	0
07:30 AM	0	0	0	0	0	0	0	0	0	0	0	0	0	0	0	0	0	0	0	0	0
07:45 AM	0	0	0	0	0	0	0	0	0	0	0	0	0	0	0	0	0	0	0	0	0
Total	0	0	0	0	0	0	0	0	0	0	0	0	0	0	0	0	0	0	0	0	0
08:00 AM	0	0	0	0	0	0	0	0	0	0	0	0	0	0	0	0	0	0	0	0	0
08:15 AM	0	0	0	0	0	0	0	0	0	0	0	0	0	0	0	0	0	0	0	0	0
08:30 AM	0	0	0	0	0	0	0	0	0	0	0	0	0	0	0	0	0	0	0	0	0
08:45 AM	0	0	0	0	0	0	0	0	0	0	0	0	0	0	0	0	0	0	0	0	0
Total	0	0	0	0	0	0	0	0	0	0	0	0	0	0	0	0	0	0	0	0	0
09:00 AM	0	0	0	0	0	0	0	0	0	0	0	0	0	0	0	0	0	0	0	0	0
09:15 AM	0	0	0	0	0	0	0	0	0	0	0	0	0	0	0	0	0	0	0	0	0
Grand Total	0	0	0	0	0	0	0	0	0	0	0	0	0	0	0	0	0	0	0	0	0
Apprch %	0	0	0	0		0	0	0	0		0	0	0	0		0	0	0	0		
Total %																					

	N Garfield Southbound				US 50 Westbound				S Garfield Northbound				US 50 Eastbound				
Start Time	Right	Thru	Left	App. Total	Right	Thru	Left	App. Total	Right	Thru	Left	App. Total	Right	Thru	Left	App. Total	Int. Total
Peak Hour Analysis From 06:30 AM to 09:15 AM - Peak 1 of 1																	
Peak Hour for Entire Intersection Begins at 06:30 AM																	
06:30 AM	0	0	0	0	0	0	0	0	0	0	0	0	0	0	0	0	0
06:45 AM	0	0	0	0	0	0	0	0	0	0	0	0	0	0	0	0	0
07:00 AM	0	0	0	0	0	0	0	0	0	0	0	0	0	0	0	0	0
07:15 AM	0	0	0	0	0	0	0	0	0	0	0	0	0	0	0	0	0
Total Volume	0	0	0	0	0	0	0	0	0	0	0	0	0	0	0	0	0
% App. Total	0	0	0		0	0	0		0	0	0		0	0	0		
PHF	.000	.000	.000	.000	.000	.000	.000	.000	.000	.000	.000	.000	.000	.000	.000	.000	.000

Peggy Malone & Associates, Inc.

(888) 247-8602

File Name : 8-Garfield St and US 50 AM
Site Code :
Start Date : 5/29/2019
Page No : 1

Groups Printed- Bicycles on Crosswalk

	N Garfield Southbound					US 50 Westbound					S Garfield Northbound					US 50 Eastbound					
Start Time	Right	Thru	Left	Peds	App. Total	Right	Thru	Left	Peds	App. Total	Right	Thru	Left	Peds	App. Total	Right	Thru	Left	Peds	App. Total	Int. Total
06:30 AM	0	0	0	1	1	0	0	0	0	0	0	0	0	0	0	0	0	0	0	0	1
06:45 AM	0	0	0	1	1	0	0	0	0	0	0	0	0	0	0	0	0	0	0	0	1
Total	0	0	0	2	2	0	0	0	0	0	0	0	0	0	0	0	0	0	0	0	2
07:00 AM	0	0	0	2	2	0	0	0	0	0	0	0	0	1	1	0	0	0	0	0	3
07:15 AM	0	0	0	0	0	0	0	0	0	0	0	0	0	0	0	0	0	0	0	0	0
07:30 AM	0	0	0	3	3	0	0	0	0	0	0	0	0	2	2	0	0	0	0	0	5
07:45 AM	0	0	0	0	0	0	0	0	0	0	0	0	0	2	2	0	0	0	0	0	2
Total	0	0	0	5	5	0	0	0	0	0	0	0	0	5	5	0	0	0	0	0	10
08:00 AM	0	0	0	0	0	0	0	0	0	0	0	0	0	2	2	0	0	0	0	0	2
08:15 AM	0	0	0	0	0	0	0	0	0	0	0	0	0	0	0	0	0	0	0	0	0
08:30 AM	0	0	0	1	1	0	0	0	0	0	0	0	0	0	0	0	0	0	0	0	1
08:45 AM	0	0	0	0	0	0	0	0	0	0	0	0	0	0	0	0	0	0	0	0	0
Total	0	0	0	1	1	0	0	0	0	0	0	0	0	2	2	0	0	0	0	0	3
09:00 AM	0	0	0	1	1	0	0	0	0	0	0	0	0	0	0	0	0	0	0	0	1
09:15 AM	0	0	0	0	0	0	0	0	0	0	0	0	0	1	1	0	0	0	0	0	1
Grand Total	0	0	0	9	9	0	0	0	0	0	0	0	0	8	8	0	0	0	0	0	17
Apprch %	0	0	0	100		0	0	0	0		0	0	0	100		0	0	0	0		
Total %	0	0	0	52.9	52.9	0	0	0	0	0	0	0	0	47.1	47.1	0	0	0	0	0	

	N Garfield Southbound				US 50 Westbound				S Garfield Northbound				US 50 Eastbound				
Start Time	Right	Thru	Left	App. Total	Right	Thru	Left	App. Total	Right	Thru	Left	App. Total	Right	Thru	Left	App. Total	Int. Total
Peak Hour Analysis From 06:30 AM to 09:15 AM - Peak 1 of 1																	
Peak Hour for Entire Intersection Begins at 06:30 AM																	
06:30 AM	0	0	0	0	0	0	0	0	0	0	0	0	0	0	0	0	0
06:45 AM	0	0	0	0	0	0	0	0	0	0	0	0	0	0	0	0	0
07:00 AM	0	0	0	0	0	0	0	0	0	0	0	0	0	0	0	0	0
07:15 AM	0	0	0	0	0	0	0	0	0	0	0	0	0	0	0	0	0
Total Volume	0	0	0	0	0	0	0	0	0	0	0	0	0	0	0	0	0
% App. Total	0	0	0		0	0	0		0	0	0		0	0	0		
PHF	.000	.000	.000	.000	.000	.000	.000	.000	.000	.000	.000	.000	.000	.000	.000	.000	.000

Peggy Malone & Associates, Inc.

(888) 247-8602

File Name : 8-Garfield St and US 50 AM
Site Code :
Start Date : 5/29/2019
Page No : 1

Groups Printed- Combined

	N Garfield Southbound					US 50 Westbound					S Garfield Northbound					US 50 Eastbound					
Start Time	Right	Thru	Left	Peds	App. Total	Right	Thru	Left	Peds	App. Total	Right	Thru	Left	Peds	App. Total	Right	Thru	Left	Peds	App. Total	Int. Total
06:30 AM	0	0	0	2	2	0	0	0	0	0	0	0	0	4	4	0	0	0	0	0	6
06:45 AM	0	0	0	5	5	0	0	0	0	0	2	0	0	0	2	0	0	0	0	0	7
Total	0	0	0	7	7	0	0	0	0	0	2	0	0	4	6	0	0	0	0	0	13
07:00 AM	0	0	1	5	6	0	0	0	0	0	2	0	0	2	4	0	0	0	0	0	10
07:15 AM	1	0	0	4	5	0	0	0	0	0	7	0	0	5	12	0	0	1	0	1	18
07:30 AM	1	0	0	8	9	0	0	0	0	0	10	0	0	3	13	0	0	1	0	1	23
07:45 AM	1	0	0	2	3	0	0	0	0	0	16	0	1	3	20	1	0	0	0	1	24
Total	3	0	1	19	23	0	0	0	0	0	35	0	1	13	49	1	0	2	0	3	75
08:00 AM	2	0	0	7	9	0	0	0	0	0	15	0	0	3	18	1	0	0	0	1	28
08:15 AM	6	0	0	5	11	1	0	0	0	1	30	0	1	3	34	1	0	1	0	2	48
08:30 AM	1	0	0	6	7	0	0	0	0	0	14	0	1	3	18	0	0	0	0	0	25
08:45 AM	0	0	0	2	2	0	0	0	0	0	10	0	0	3	13	1	0	2	0	3	18
Total	9	0	0	20	29	1	0	0	0	1	69	0	2	12	83	3	0	3	0	6	119
09:00 AM	0	0	0	5	5	0	0	0	0	0	7	0	0	3	10	0	0	2	0	2	17
09:15 AM	1	0	1	1	3	0	0	0	0	0	7	0	1	6	14	9	0	1	0	10	27
Grand Total	13	0	2	52	67	1	0	0	0	1	120	0	4	38	162	13	0	8	0	21	251
Apprch %	19.4	0	3	77.6		100	0	0	0		74.1	0	2.5	23.5		61.9	0	38.1	0		
Total %	5.2	0	0.8	20.7	26.7	0.4	0	0	0	0.4	47.8	0	1.6	15.1	64.5	5.2	0	3.2	0	8.4	

	N Garfield Southbound				US 50 Westbound				S Garfield Northbound				US 50 Eastbound				
Start Time	Right	Thru	Left	App. Total	Right	Thru	Left	App. Total	Right	Thru	Left	App. Total	Right	Thru	Left	App. Total	Int. Total
Peak Hour Analysis From 06:30 AM to 09:15 AM - Peak 1 of 1																	
Peak Hour for Entire Intersection Begins at 07:45 AM																	
07:45 AM	1	0	0	1	0	0	0	0	16	0	**1**	17	**1**	0	0	1	19
08:00 AM	2	0	0	2	0	0	0	0	15	0	0	15	1	0	0	1	18
08:15 AM	**6**	0	0	**6**	**1**	0	0	**1**	**30**	0	1	**31**	1	0	**1**	**2**	**40**
08:30 AM	1	0	0	1	0	0	0	0	14	0	1	15	0	0	0	0	16
Total Volume	10	0	0	10	1	0	0	1	75	0	3	78	3	0	1	4	93
% App. Total	100	0	0		100	0	0		96.2	0	3.8		75	0	25		
PHF	.417	.000	.000	.417	.250	.000	.000	.250	.625	.000	.750	.629	.750	.000	.250	.500	.581

Peggy Malone & Associates, Inc.

(888) 247-8602

File Name : 8-Garfield St and US 50 PM
Site Code :
Start Date : 5/29/2019
Page No : 1

Groups Printed- Car

	N Garfield Southbound					US 50 Westbound					S Garfield Northbound					US 50 Eastbound					
Start Time	Right	Thru	Left	Peds	App. Total	Right	Thru	Left	Peds	App. Total	Right	Thru	Left	Peds	App. Total	Right	Thru	Left	Peds	App. Total	Int. Total
03:30 PM	2	0	0	3	5	1	0	0	0	1	0	0	1	1	2	2	0	2	0	4	12
03:45 PM	3	0	0	1	4	0	0	0	0	0	0	0	0	2	2	0	0	0	0	0	6
Total	5	0	0	4	9	1	0	0	0	1	0	0	1	3	4	2	0	2	0	4	18
04:00 PM	0	0	0	1	1	1	0	0	0	1	1	0	0	0	1	0	0	1	0	1	4
04:15 PM	0	0	0	3	3	0	0	0	0	0	1	0	0	0	1	1	0	0	0	1	5
04:30 PM	7	0	0	0	7	1	0	0	0	1	0	0	0	0	0	5	0	2	0	7	15
04:45 PM	10	0	0	0	10	0	0	0	0	0	1	0	0	0	1	3	0	0	0	3	14
Total	17	0	0	4	21	2	0	0	0	2	3	0	0	0	3	9	0	3	0	12	38
05:00 PM	11	0	0	2	13	1	0	2	0	3	4	0	0	0	4	3	0	0	0	3	23
05:15 PM	11	0	0	0	11	2	0	0	0	2	1	0	0	3	4	3	0	0	0	3	20
05:30 PM	17	0	0	0	17	0	0	1	0	1	2	0	1	0	3	1	0	1	0	2	23
05:45 PM	9	0	0	0	9	2	0	0	0	2	1	0	0	1	2	0	0	1	0	1	14
Total	48	0	0	2	50	5	0	3	0	8	8	0	1	4	13	7	0	2	0	9	80
06:00 PM	5	0	0	3	8	1	0	0	0	1	1	0	0	1	2	0	0	3	0	3	14
06:15 PM	5	0	2	0	7	0	0	1	0	1	2	0	0	0	2	3	0	0	0	3	13
Grand Total	80	0	2	13	95	9	0	4	0	13	14	0	2	8	24	21	0	10	0	31	163
Apprch %	84.2	0	2.1	13.7		69.2	0	30.8	0		58.3	0	8.3	33.3		67.7	0	32.3	0		
Total %	49.1	0	1.2	8	58.3	5.5	0	2.5	0	8	8.6	0	1.2	4.9	14.7	12.9	0	6.1	0	19	

	N Garfield Southbound				US 50 Westbound				S Garfield Northbound				US 50 Eastbound				
Start Time	Right	Thru	Left	App. Total	Right	Thru	Left	App. Total	Right	Thru	Left	App. Total	Right	Thru	Left	App. Total	Int. Total
Peak Hour Analysis From 03:30 PM to 06:15 PM - Peak 1 of 1																	
Peak Hour for Entire Intersection Begins at 04:45 PM																	
04:45 PM	10	0	0	10	0	0	0	0	1	0	0	1	**3**	0	0	**3**	14
05:00 PM	11	0	0	11	1	0	**2**	**3**	**4**	0	0	**4**	3	0	0	3	21
05:15 PM	11	0	0	11	**2**	0	0	2	1	0	0	1	3	0	0	3	17
05:30 PM	**17**	0	0	**17**	0	0	1	1	2	0	**1**	3	1	0	**1**	2	**23**
Total Volume	49	0	0	49	3	0	3	6	8	0	1	9	10	0	1	11	75
% App. Total	100	0	0		50	0	50		88.9	0	11.1		90.9	0	9.1		
PHF	.721	.000	.000	.721	.375	.000	.375	.500	.500	.000	.250	.563	.833	.000	.250	.917	.815

Peggy Malone & Associates, Inc.

(888) 247-8602

File Name : 8-Garfield St and US 50 PM
Site Code :
Start Date : 5/29/2019
Page No : 1

Groups Printed- Truck

	N Garfield Southbound					US 50 Westbound					S Garfield Northbound					US 50 Eastbound					
Start Time	Right	Thru	Left	Peds	App. Total	Right	Thru	Left	Peds	App. Total	Right	Thru	Left	Peds	App. Total	Right	Thru	Left	Peds	App. Total	Int. Total
03:30 PM	0	0	0	0	0	0	0	0	0	0	0	0	0	0	0	0	0	0	0	0	0
03:45 PM	2	0	0	0	2	0	0	0	0	0	0	0	0	0	0	0	0	0	0	0	2
Total	2	0	0	0	2	0	0	0	0	0	0	0	0	0	0	0	0	0	0	0	2
04:00 PM	0	0	0	0	0	0	0	0	0	0	0	0	1	0	1	0	0	0	0	0	1
04:15 PM	0	0	0	0	0	0	0	0	0	0	0	0	0	0	0	0	0	0	0	0	0
04:30 PM	0	0	0	0	0	0	0	0	0	0	0	0	0	0	0	0	0	0	0	0	0
04:45 PM	0	0	0	0	0	0	0	0	0	0	0	0	1	0	1	0	0	0	0	0	1
Total	0	0	0	0	0	0	0	0	0	0	0	0	2	0	2	0	0	0	0	0	2
05:00 PM	0	0	0	0	0	0	0	0	0	0	0	0	0	0	0	0	0	0	0	0	0
05:15 PM	0	0	0	0	0	0	0	0	0	0	0	0	0	0	0	0	0	0	0	0	0
05:30 PM	0	0	0	0	0	0	0	0	0	0	0	0	0	0	0	0	0	0	0	0	0
05:45 PM	0	0	0	0	0	0	0	0	0	0	0	0	0	0	0	0	0	0	0	0	0
Total	0	0	0	0	0	0	0	0	0	0	0	0	0	0	0	0	0	0	0	0	0
06:00 PM	0	0	0	0	0	0	0	0	0	0	0	0	0	0	0	0	0	0	0	0	0
06:15 PM	0	0	0	0	0	0	0	0	0	0	0	0	0	0	0	0	0	0	0	0	0
Grand Total	2	0	0	0	2	0	0	0	0	0	0	0	2	0	2	0	0	0	0	0	4
Apprch %	100	0	0	0		0	0	0	0		0	0	100	0		0	0	0	0		
Total %	50	0	0	0	50	0	0	0	0	0	0	0	50	0	50	0	0	0	0	0	

	N Garfield Southbound				US 50 Westbound				S Garfield Northbound				US 50 Eastbound				
Start Time	Right	Thru	Left	App. Total	Right	Thru	Left	App. Total	Right	Thru	Left	App. Total	Right	Thru	Left	App. Total	Int. Total
Peak Hour Analysis From 03:30 PM to 06:15 PM - Peak 1 of 1																	
Peak Hour for Entire Intersection Begins at 03:30 PM																	
03:30 PM	0	0	0	0	0	0	0	0	0	0	0	0	0	0	0	0	0
03:45 PM	**2**	0	0	**2**	0	0	0	0	0	0	0	0	0	0	0	0	**2**
04:00 PM	0	0	0	0	0	0	0	0	0	0	**1**	**1**	0	0	0	0	1
04:15 PM	0	0	0	0	0	0	0	0	0	0	0	0	0	0	0	0	0
Total Volume	2	0	0	2	0	0	0	0	0	0	1	1	0	0	0	0	3
% App. Total	100	0	0		0	0	0		0	0	100		0	0	0		
PHF	.250	.000	.000	.250	.000	.000	.000	.000	.000	.000	.250	.250	.000	.000	.000	.000	.375

Peggy Malone & Associates, Inc.

(888) 247-8602

File Name : 8-Garfield St and US 50 PM
Site Code :
Start Date : 5/29/2019
Page No : 1

Groups Printed- Bicycles on Crosswalk

	N Garfield Southbound					US 50 Westbound					S Garfield Northbound					US 50 Eastbound					
Start Time	Right	Thru	Left	Peds	App. Total	Right	Thru	Left	Peds	App. Total	Right	Thru	Left	Peds	App. Total	Right	Thru	Left	Peds	App. Total	Int. Total
03:30 PM	0	0	0	0	0	0	0	0	0	0	0	0	0	0	0	0	0	0	0	0	0
03:45 PM	0	0	0	0	0	0	0	0	0	0	0	0	0	1	1	0	0	0	0	0	1
Total	0	0	0	0	0	0	0	0	0	0	0	0	0	1	1	0	0	0	0	0	1
04:00 PM	0	0	0	0	0	0	0	0	0	0	0	0	0	0	0	0	0	0	0	0	0
04:15 PM	0	0	0	0	0	0	0	0	0	0	0	0	0	1	1	0	0	0	0	0	1
04:30 PM	0	0	0	0	0	0	0	0	0	0	0	0	0	1	1	0	0	0	0	0	1
04:45 PM	0	0	0	0	0	0	0	0	0	0	0	0	0	1	1	0	0	0	0	0	1
Total	0	0	0	0	0	0	0	0	0	0	0	0	0	3	3	0	0	0	0	0	3
05:00 PM	0	0	0	0	0	0	0	0	0	0	0	0	0	0	0	0	0	0	0	0	0
05:15 PM	0	0	0	0	0	0	0	0	0	0	0	0	0	0	0	0	0	0	0	0	0
05:30 PM	0	0	0	0	0	0	0	0	0	0	0	0	0	2	2	0	0	0	0	0	2
05:45 PM	0	0	0	0	0	0	0	0	0	0	0	0	0	0	0	0	0	0	0	0	0
Total	0	0	0	0	0	0	0	0	0	0	0	0	0	2	2	0	0	0	0	0	2
06:00 PM	0	0	0	0	0	0	0	0	0	0	0	0	0	3	3	0	0	0	0	0	3
06:15 PM	0	0	0	0	0	0	0	0	0	0	0	0	0	2	2	0	0	0	0	0	2
Grand Total	0	0	0	0	0	0	0	0	0	0	0	0	0	11	11	0	0	0	0	0	11
Apprch %	0	0	0	0		0	0	0	0		0	0	0	100		0	0	0	0		
Total %	0	0	0	0	0	0	0	0	0	0	0	0	0	100	100	0	0	0	0	0	

	N Garfield Southbound				US 50 Westbound				S Garfield Northbound				US 50 Eastbound				
Start Time	Right	Thru	Left	App. Total	Right	Thru	Left	App. Total	Right	Thru	Left	App. Total	Right	Thru	Left	App. Total	Int. Total
Peak Hour Analysis From 03:30 PM to 06:15 PM - Peak 1 of 1																	
Peak Hour for Entire Intersection Begins at 03:30 PM																	
03:30 PM	0	0	0	0	0	0	0	0	0	0	0	0	0	0	0	0	0
03:45 PM	0	0	0	0	0	0	0	0	0	0	0	0	0	0	0	0	0
04:00 PM	0	0	0	0	0	0	0	0	0	0	0	0	0	0	0	0	0
04:15 PM	0	0	0	0	0	0	0	0	0	0	0	0	0	0	0	0	0
Total Volume	0	0	0	0	0	0	0	0	0	0	0	0	0	0	0	0	0
% App. Total	0	0	0		0	0	0		0	0	0		0	0	0		
PHF	.000	.000	.000	.000	.000	.000	.000	.000	.000	.000	.000	.000	.000	.000	.000	.000	.000

Peggy Malone & Associates, Inc.

(888) 247-8602

File Name : 8-Garfield St and US 50 PM
Site Code :
Start Date : 5/29/2019
Page No : 1

Groups Printed- Combined

	N Garfield Southbound					US 50 Westbound					S Garfield Northbound					US 50 Eastbound					
Start Time	Right	Thru	Left	Peds	App. Total	Right	Thru	Left	Peds	App. Total	Right	Thru	Left	Peds	App. Total	Right	Thru	Left	Peds	App. Total	Int. Total
03:30 PM	2	0	0	3	5	1	0	0	0	1	0	0	1	1	2	2	0	2	0	4	12
03:45 PM	5	0	0	1	6	0	0	0	0	0	0	0	0	3	3	0	0	0	0	0	9
Total	7	0	0	4	11	1	0	0	0	1	0	0	1	4	5	2	0	2	0	4	21
04:00 PM	0	0	0	1	1	1	0	0	0	1	1	0	1	0	2	0	0	1	0	1	5
04:15 PM	0	0	0	3	3	0	0	0	0	0	1	0	0	1	2	1	0	0	0	1	6
04:30 PM	7	0	0	0	7	1	0	0	0	1	0	0	0	1	1	5	0	2	0	7	16
04:45 PM	10	0	0	0	10	0	0	0	0	0	1	0	1	1	3	3	0	0	0	3	16
Total	17	0	0	4	21	2	0	0	0	2	3	0	2	3	8	9	0	3	0	12	43
05:00 PM	11	0	0	2	13	1	0	2	0	3	4	0	0	0	4	3	0	0	0	3	23
05:15 PM	11	0	0	0	11	2	0	0	0	2	1	0	0	3	4	3	0	0	0	3	20
05:30 PM	17	0	0	0	17	0	0	1	0	1	2	0	1	2	5	1	0	1	0	2	25
05:45 PM	9	0	0	0	9	2	0	0	0	2	1	0	0	1	2	0	0	1	0	1	14
Total	48	0	0	2	50	5	0	3	0	8	8	0	1	6	15	7	0	2	0	9	82
06:00 PM	5	0	0	3	8	1	0	0	0	1	1	0	0	4	5	0	0	3	0	3	17
06:15 PM	5	0	2	0	7	0	0	1	0	1	2	0	0	2	4	3	0	0	0	3	15
Grand Total	82	0	2	13	97	9	0	4	0	13	14	0	4	19	37	21	0	10	0	31	178
Apprch %	84.5	0	2.1	13.4		69.2	0	30.8	0		37.8	0	10.8	51.4		67.7	0	32.3	0		
Total %	46.1	0	1.1	7.3	54.5	5.1	0	2.2	0	7.3	7.9	0	2.2	10.7	20.8	11.8	0	5.6	0	17.4	

	N Garfield Southbound				US 50 Westbound				S Garfield Northbound				US 50 Eastbound				
Start Time	Right	Thru	Left	App. Total	Right	Thru	Left	App. Total	Right	Thru	Left	App. Total	Right	Thru	Left	App. Total	Int. Total
Peak Hour Analysis From 03:30 PM to 06:15 PM - Peak 1 of 1																	
Peak Hour for Entire Intersection Begins at 04:45 PM																	
04:45 PM	10	0	0	10	0	0	0	0	1	0	**1**	2	**3**	0	0	**3**	15
05:00 PM	11	0	0	11	1	0	**2**	**3**	**4**	0	0	**4**	3	0	0	3	21
05:15 PM	11	0	0	11	**2**	0	0	2	1	0	0	1	3	0	0	3	17
05:30 PM	**17**	0	0	**17**	0	0	1	1	2	0	1	3	1	0	**1**	2	**23**
Total Volume	49	0	0	49	3	0	3	6	8	0	2	10	10	0	1	11	76
% App. Total	100	0	0		50	0	50		80	0	20		90.9	0	9.1		
PHF	.721	.000	.000	.721	.375	.000	.375	.500	.500	.000	.500	.625	.833	.000	.250	.917	.826

Peggy Malone & Associates, Inc.

(888) 247-8602

File Name : 9-Fenwick St and US 50 AM
Site Code :
Start Date : 5/29/2019
Page No : 1

Groups Printed- Car

	N Fenwick Southbound					US 50 Westbound					S Fenwick Northbound					US 50 Eastbound					
Start Time	Right	Thru	Left	Peds	App. Total	Right	Thru	Left	Peds	App. Total	Right	Thru	Left	Peds	App. Total	Right	Thru	Left	Peds	App. Total	Int. Total
06:30 AM	0	0	0	0	0	0	0	0	0	0	1	0	0	4	5	1	0	0	0	1	6
06:45 AM	0	0	0	0	0	0	0	0	0	0	2	0	0	0	2	5	0	0	0	5	7
Total	0	0	0	0	0	0	0	0	0	0	3	0	0	4	7	6	0	0	0	6	13
07:00 AM	1	0	0	0	1	1	0	0	0	1	1	0	0	2	3	3	0	0	0	3	8
07:15 AM	1	0	0	0	1	0	0	0	0	0	1	0	0	6	7	2	0	0	0	2	10
07:30 AM	0	0	0	0	0	0	0	0	0	0	2	0	0	0	2	0	0	1	0	1	3
07:45 AM	0	0	0	0	0	1	0	0	0	1	9	0	0	1	10	2	0	1	0	3	14
Total	2	0	0	0	2	2	0	0	0	2	13	0	0	9	22	7	0	2	0	9	35
08:00 AM	0	0	0	1	1	2	0	0	0	2	13	0	0	2	15	2	0	1	0	3	21
08:15 AM	0	0	0	0	0	0	0	0	0	0	5	0	0	1	6	1	0	0	0	1	7
08:30 AM	2	0	0	0	2	0	0	0	0	0	4	0	0	3	7	1	0	0	0	1	10
08:45 AM	1	0	0	0	1	0	0	0	0	0	4	0	1	0	5	0	0	0	0	0	6
Total	3	0	0	1	4	2	0	0	0	2	26	0	1	6	33	4	0	1	0	5	44
09:00 AM	2	0	1	0	3	0	0	0	0	0	1	0	0	2	3	0	0	0	0	0	6
09:15 AM	0	0	0	0	0	0	0	0	0	0	0	0	0	0	0	1	0	0	0	1	1
Grand Total	7	0	1	1	9	4	0	0	0	4	43	0	1	21	65	18	0	3	0	21	99
Apprch %	77.8	0	11.1	11.1		100	0	0	0		66.2	0	1.5	32.3		85.7	0	14.3	0		
Total %	7.1	0	1	1	9.1	4	0	0	0	4	43.4	0	1	21.2	65.7	18.2	0	3	0	21.2	

	N Fenwick Southbound				US 50 Westbound				S Fenwick Northbound				US 50 Eastbound				
Start Time	Right	Thru	Left	App. Total	Right	Thru	Left	App. Total	Right	Thru	Left	App. Total	Right	Thru	Left	App. Total	Int. Total
Peak Hour Analysis From 06:30 AM to 09:15 AM - Peak 1 of 1																	
Peak Hour for Entire Intersection Begins at 07:45 AM																	
07:45 AM	0	0	0	0	1	0	0	1	9	0	0	9	**2**	0	**1**	**3**	13
08:00 AM	0	0	0	0	**2**	0	0	**2**	**13**	0	0	**13**	2	0	1	3	**18**
08:15 AM	0	0	0	0	0	0	0	0	5	0	0	5	1	0	0	1	6
08:30 AM	**2**	0	0	**2**	0	0	0	0	4	0	0	4	1	0	0	1	7
Total Volume	2	0	0	2	3	0	0	3	31	0	0	31	6	0	2	8	44
% App. Total	100	0	0		100	0	0		100	0	0		75	0	25		
PHF	.250	.000	.000	.250	.375	.000	.000	.375	.596	.000	.000	.596	.750	.000	.500	.667	.611

Peggy Malone & Associates, Inc.

(888) 247-8602

File Name : 9-Fenwick St and US 50 AM
Site Code :
Start Date : 5/29/2019
Page No : 1

Groups Printed- Truck

	N Fenwick Southbound					US 50 Westbound					S Fenwick Northbound					US 50 Eastbound					
Start Time	Right	Thru	Left	Peds	App. Total	Right	Thru	Left	Peds	App. Total	Right	Thru	Left	Peds	App. Total	Right	Thru	Left	Peds	App. Total	Int. Total
06:30 AM	0	0	0	0	0	0	0	0	0	0	0	0	0	0	0	0	0	0	0	0	0
06:45 AM	0	0	0	0	0	0	0	0	0	0	0	0	0	0	0	0	0	0	0	0	0
Total	0	0	0	0	0	0	0	0	0	0	0	0	0	0	0	0	0	0	0	0	0
07:00 AM	0	0	0	0	0	0	0	0	0	0	0	0	0	0	0	0	0	0	0	0	0
07:15 AM	0	0	0	0	0	0	0	0	0	0	0	0	0	0	0	0	0	0	0	0	0
07:30 AM	0	0	0	0	0	0	0	0	0	0	0	0	0	0	0	1	0	0	0	1	1
07:45 AM	0	0	0	0	0	0	0	0	0	0	0	0	0	0	0	0	0	0	0	0	0
Total	0	0	0	0	0	0	0	0	0	0	0	0	0	0	0	1	0	0	0	1	1
08:00 AM	0	0	0	0	0	0	0	0	0	0	0	0	0	0	0	0	0	0	0	0	0
08:15 AM	0	0	0	0	0	0	0	0	0	0	0	0	0	0	0	0	0	0	0	0	0
08:30 AM	0	0	0	0	0	0	0	0	0	0	0	0	0	0	0	0	0	0	0	0	0
08:45 AM	0	0	0	0	0	0	0	0	0	0	0	0	0	0	0	0	0	0	0	0	0
Total	0	0	0	0	0	0	0	0	0	0	0	0	0	0	0	0	0	0	0	0	0
09:00 AM	0	0	0	0	0	0	0	0	0	0	0	0	0	0	0	0	0	0	0	0	0
09:15 AM	0	0	0	0	0	0	0	0	0	0	0	0	0	0	0	0	0	0	0	0	0
Grand Total	0	0	0	0	0	0	0	0	0	0	0	0	0	0	0	1	0	0	0	1	1
Apprch %	0	0	0	0		0	0	0	0		0	0	0	0		100	0	0	0		
Total %	0	0	0	0	0	0	0	0	0	0	0	0	0	0	0	100	0	0	0	100	

	N Fenwick Southbound				US 50 Westbound				S Fenwick Northbound				US 50 Eastbound				
Start Time	Right	Thru	Left	App. Total	Right	Thru	Left	App. Total	Right	Thru	Left	App. Total	Right	Thru	Left	App. Total	Int. Total
Peak Hour Analysis From 06:30 AM to 09:15 AM - Peak 1 of 1																	
Peak Hour for Entire Intersection Begins at 06:45 AM																	
06:45 AM	0	0	0	0	0	0	0	0	0	0	0	0	0	0	0	0	0
07:00 AM	0	0	0	0	0	0	0	0	0	0	0	0	0	0	0	0	0
07:15 AM	0	0	0	0	0	0	0	0	0	0	0	0	0	0	0	0	0
07:30 AM	0	0	0	0	0	0	0	0	0	0	0	0	**1**	0	0	**1**	**1**
Total Volume	0	0	0	0	0	0	0	0	0	0	0	0	1	0	0	1	1
% App. Total	0	0	0		0	0	0		0	0	0		100	0	0		
PHF	.000	.000	.000	.000	.000	.000	.000	.000	.000	.000	.000	.000	.250	.000	.000	.250	.250

Peggy Malone & Associates, Inc.

(888) 247-8602

File Name : 9-Fenwick St and US 50 AM
Site Code :
Start Date : 5/29/2019
Page No : 1

Groups Printed- Bicycles on Crosswalk

	N Fenwick Southbound					US 50 Westbound					S Fenwick Northbound					US 50 Eastbound					
Start Time	Right	Thru	Left	Peds	App. Total	Right	Thru	Left	Peds	App. Total	Right	Thru	Left	Peds	App. Total	Right	Thru	Left	Peds	App. Total	Int. Total
06:30 AM	0	0	0	0	0	0	0	0	0	0	0	0	0	0	0	0	0	0	0	0	0
06:45 AM	0	0	0	0	0	0	0	0	0	0	0	0	0	0	0	0	0	0	0	0	0
Total	0	0	0	0	0	0	0	0	0	0	0	0	0	0	0	0	0	0	0	0	0
07:00 AM	0	0	0	0	0	0	0	0	0	0	0	0	0	0	0	0	0	0	0	0	0
07:15 AM	0	0	0	0	0	0	0	0	0	0	0	0	0	0	0	0	0	0	0	0	0
07:30 AM	0	0	0	0	0	0	0	0	0	0	0	0	0	0	0	0	0	0	0	0	0
07:45 AM	0	0	0	0	0	0	0	0	0	0	0	0	0	1	1	0	0	0	0	0	1
Total	0	0	0	0	0	0	0	0	0	0	0	0	0	1	1	0	0	0	0	0	1
08:00 AM	0	0	0	0	0	0	0	0	0	0	0	0	0	0	0	0	0	0	0	0	0
08:15 AM	0	0	0	0	0	0	0	0	0	0	0	0	0	0	0	0	0	0	0	0	0
08:30 AM	0	0	0	0	0	0	0	0	0	0	0	0	0	0	0	0	0	0	0	0	0
08:45 AM	0	0	0	0	0	0	0	0	0	0	0	0	0	0	0	0	0	0	0	0	0
Total	0	0	0	0	0	0	0	0	0	0	0	0	0	0	0	0	0	0	0	0	0
09:00 AM	0	0	0	0	0	0	0	0	0	0	0	0	0	0	0	0	0	0	0	0	0
09:15 AM	0	0	0	0	0	0	0	0	0	0	0	0	0	0	0	0	0	0	0	0	0
Grand Total	0	0	0	0	0	0	0	0	0	0	0	0	0	1	1	0	0	0	0	0	1
Apprch %	0	0	0	0		0	0	0	0		0	0	0	100		0	0	0	0		
Total %	0	0	0	0	0	0	0	0	0	0	0	0	0	100	100	0	0	0	0	0	

	N Fenwick Southbound				US 50 Westbound				S Fenwick Northbound				US 50 Eastbound				
Start Time	Right	Thru	Left	App. Total	Right	Thru	Left	App. Total	Right	Thru	Left	App. Total	Right	Thru	Left	App. Total	Int. Total
Peak Hour Analysis From 06:30 AM to 09:15 AM - Peak 1 of 1																	
Peak Hour for Entire Intersection Begins at 06:30 AM																	
06:30 AM	0	0	0	0	0	0	0	0	0	0	0	0	0	0	0	0	0
06:45 AM	0	0	0	0	0	0	0	0	0	0	0	0	0	0	0	0	0
07:00 AM	0	0	0	0	0	0	0	0	0	0	0	0	0	0	0	0	0
07:15 AM	0	0	0	0	0	0	0	0	0	0	0	0	0	0	0	0	0
Total Volume	0	0	0	0	0	0	0	0	0	0	0	0	0	0	0	0	0
% App. Total	0	0	0		0	0	0		0	0	0		0	0	0		
PHF	.000	.000	.000	.000	.000	.000	.000	.000	.000	.000	.000	.000	.000	.000	.000	.000	.000

Peggy Malone & Associates, Inc.

(888) 247-8602

File Name : 9-Fenwick St and US 50 AM
Site Code :
Start Date : 5/29/2019
Page No : 1

Groups Printed- Combined

	N Fenwick Southbound					US 50 Westbound					S Fenwick Northbound					US 50 Eastbound					
Start Time	Right	Thru	Left	Peds	App. Total	Right	Thru	Left	Peds	App. Total	Right	Thru	Left	Peds	App. Total	Right	Thru	Left	Peds	App. Total	Int. Total
06:30 AM	0	0	0	0	0	0	0	0	0	0	1	0	0	4	5	1	0	0	0	1	6
06:45 AM	0	0	0	0	0	0	0	0	0	0	2	0	0	0	2	5	0	0	0	5	7
Total	0	0	0	0	0	0	0	0	0	0	3	0	0	4	7	6	0	0	0	6	13
07:00 AM	1	0	0	0	1	1	0	0	0	1	1	0	0	2	3	3	0	0	0	3	8
07:15 AM	1	0	0	0	1	0	0	0	0	0	1	0	0	6	7	2	0	0	0	2	10
07:30 AM	0	0	0	0	0	0	0	0	0	0	2	0	0	0	2	1	0	1	0	2	4
07:45 AM	0	0	0	0	0	1	0	0	0	1	9	0	0	2	11	2	0	1	0	3	15
Total	2	0	0	0	2	2	0	0	0	2	13	0	0	10	23	8	0	2	0	10	37
08:00 AM	0	0	0	1	1	2	0	0	0	2	13	0	0	2	15	2	0	1	0	3	21
08:15 AM	0	0	0	0	0	0	0	0	0	0	5	0	0	1	6	1	0	0	0	1	7
08:30 AM	2	0	0	0	2	0	0	0	0	0	4	0	0	3	7	1	0	0	0	1	10
08:45 AM	1	0	0	0	1	0	0	0	0	0	4	0	1	0	5	0	0	0	0	0	6
Total	3	0	0	1	4	2	0	0	0	2	26	0	1	6	33	4	0	1	0	5	44
09:00 AM	2	0	1	0	3	0	0	0	0	0	1	0	0	2	3	0	0	0	0	0	6
09:15 AM	0	0	0	0	0	0	0	0	0	0	0	0	0	0	0	1	0	0	0	1	1
Grand Total	7	0	1	1	9	4	0	0	0	4	43	0	1	22	66	19	0	3	0	22	101
Apprch %	77.8	0	11.1	11.1		100	0	0	0		65.2	0	1.5	33.3		86.4	0	13.6	0		
Total %	6.9	0	1	1	8.9	4	0	0	0	4	42.6	0	1	21.8	65.3	18.8	0	3	0	21.8	

	N Fenwick Southbound				US 50 Westbound				S Fenwick Northbound				US 50 Eastbound				
Start Time	Right	Thru	Left	App. Total	Right	Thru	Left	App. Total	Right	Thru	Left	App. Total	Right	Thru	Left	App. Total	Int. Total
Peak Hour Analysis From 06:30 AM to 09:15 AM - Peak 1 of 1																	
Peak Hour for Entire Intersection Begins at 07:45 AM																	
07:45 AM	0	0	0	0	1	0	0	1	9	0	0	9	**2**	0	**1**	**3**	13
08:00 AM	0	0	0	0	**2**	0	0	**2**	**13**	0	0	**13**	2	0	1	3	**18**
08:15 AM	0	0	0	0	0	0	0	0	5	0	0	5	1	0	0	1	6
08:30 AM	**2**	0	0	**2**	0	0	0	0	4	0	0	4	1	0	0	1	7
Total Volume	2	0	0	2	3	0	0	3	31	0	0	31	6	0	2	8	44
% App. Total	100	0	0		100	0	0		100	0	0		75	0	25		
PHF	.250	.000	.000	.250	.375	.000	.000	.375	.596	.000	.000	.596	.750	.000	.500	.667	.611

Peggy Malone & Associates, Inc.

(888) 247-8602

File Name : 9-Fenwick St and US 50 PM
Site Code :
Start Date : 5/29/2019
Page No : 1

Groups Printed- Car

	N Fenwick Southbound					US 50 Westbound					S Fenwick Northbound					US 50 Eastbound					
Start Time	Right	Thru	Left	Peds	App. Total	Right	Thru	Left	Peds	App. Total	Right	Thru	Left	Peds	App. Total	Right	Thru	Left	Peds	App. Total	Int. Total
03:30 PM	0	0	0	0	0	0	0	0	0	0	0	0	0	0	0	5	0	0	0	5	5
03:45 PM	0	0	0	0	0	0	0	0	0	0	0	0	0	0	0	3	0	1	0	4	4
Total	0	0	0	0	0	0	0	0	0	0	0	0	0	0	0	8	0	1	0	9	9
04:00 PM	1	0	0	0	1	0	0	0	0	0	0	0	0	1	1	6	0	1	0	7	9
04:15 PM	1	0	0	0	1	0	0	0	0	0	1	0	0	0	1	0	0	1	0	1	3
04:30 PM	1	0	0	0	1	0	0	0	0	0	2	0	0	0	2	0	0	1	0	1	4
04:45 PM	0	0	0	1	1	0	0	0	0	0	0	0	0	0	0	5	0	2	0	7	8
Total	3	0	0	1	4	0	0	0	0	0	3	0	0	1	4	11	0	5	0	16	24
05:00 PM	0	0	0	0	0	1	0	0	0	1	3	0	0	0	3	3	0	1	0	4	8
05:15 PM	1	0	0	0	1	0	0	0	0	0	2	0	1	0	3	1	0	0	0	1	5
05:30 PM	1	0	0	0	1	0	0	0	0	0	1	0	0	2	3	7	0	0	0	7	11
05:45 PM	2	0	0	0	2	0	0	0	0	0	2	0	0	2	4	5	0	1	0	6	12
Total	4	0	0	0	4	1	0	0	0	1	8	0	1	4	13	16	0	2	0	18	36
06:00 PM	0	0	0	1	1	1	0	0	0	1	4	0	0	3	7	3	0	0	0	3	12
06:15 PM	2	0	0	0	2	0	0	0	0	0	1	0	0	0	1	0	0	1	0	1	4
Grand Total	9	0	0	2	11	2	0	0	0	2	16	0	1	8	25	38	0	9	0	47	85
Apprch %	81.8	0	0	18.2		100	0	0	0		64	0	4	32		80.9	0	19.1	0		
Total %	10.6	0	0	2.4	12.9	2.4	0	0	0	2.4	18.8	0	1.2	9.4	29.4	44.7	0	10.6	0	55.3	

	N Fenwick Southbound				US 50 Westbound				S Fenwick Northbound				US 50 Eastbound				
Start Time	Right	Thru	Left	App. Total	Right	Thru	Left	App. Total	Right	Thru	Left	App. Total	Right	Thru	Left	App. Total	Int. Total
Peak Hour Analysis From 03:30 PM to 06:15 PM - Peak 1 of 1																	
Peak Hour for Entire Intersection Begins at 05:00 PM																	
05:00 PM	0	0	0	0	**1**	0	0	**1**	**3**	0	0	**3**	3	0	**1**	4	8
05:15 PM	1	0	0	1	0	0	0	0	2	0	**1**	3	1	0	0	1	5
05:30 PM	1	0	0	1	0	0	0	0	1	0	0	1	**7**	0	0	**7**	9
05:45 PM	**2**	0	0	**2**	0	0	0	0	2	0	0	2	5	0	1	6	**10**
Total Volume	4	0	0	4	1	0	0	1	8	0	1	9	16	0	2	18	32
% App. Total	100	0	0		100	0	0		88.9	0	11.1		88.9	0	11.1		
PHF	.500	.000	.000	.500	.250	.000	.000	.250	.667	.000	.250	.750	.571	.000	.500	.643	.800

Peggy Malone & Associates, Inc.

(888) 247-8602

File Name : 9-Fenwick St and US 50 PM
Site Code :
Start Date : 5/29/2019
Page No : 1

Groups Printed- Truck

	N Fenwick Southbound					US 50 Westbound					S Fenwick Northbound					US 50 Eastbound					
Start Time	Right	Thru	Left	Peds	App. Total	Right	Thru	Left	Peds	App. Total	Right	Thru	Left	Peds	App. Total	Right	Thru	Left	Peds	App. Total	Int. Total
03:30 PM	0	0	0	0	0	1	0	0	0	1	0	0	0	0	0	0	0	0	0	0	1
03:45 PM	0	0	0	0	0	0	0	0	0	0	0	0	0	0	0	0	0	0	0	0	0
Total	0	0	0	0	0	1	0	0	0	1	0	0	0	0	0	0	0	0	0	0	1
04:00 PM	0	0	0	0	0	0	0	0	0	0	0	0	0	0	0	0	0	0	0	0	0
04:15 PM	0	0	0	0	0	0	0	0	0	0	0	0	0	0	0	0	0	0	0	0	0
04:30 PM	0	0	0	0	0	0	0	0	0	0	0	0	0	0	0	0	0	0	0	0	0
04:45 PM	0	0	0	0	0	0	0	0	0	0	0	0	0	0	0	0	0	0	0	0	0
Total	0	0	0	0	0	0	0	0	0	0	0	0	0	0	0	0	0	0	0	0	0
05:00 PM	0	0	0	0	0	0	0	0	0	0	0	0	0	0	0	0	0	0	0	0	0
05:15 PM	0	0	0	0	0	0	0	0	0	0	0	0	0	0	0	0	0	0	0	0	0
05:30 PM	0	0	0	0	0	0	0	0	0	0	0	0	0	0	0	0	0	0	0	0	0
05:45 PM	0	0	0	0	0	0	0	0	0	0	0	0	0	0	0	0	0	0	0	0	0
Total	0	0	0	0	0	0	0	0	0	0	0	0	0	0	0	0	0	0	0	0	0
06:00 PM	0	0	0	0	0	0	0	0	0	0	0	0	0	0	0	0	0	0	0	0	0
06:15 PM	0	0	0	0	0	0	0	0	0	0	0	0	0	0	0	0	0	0	0	0	0
Grand Total	0	0	0	0	0	1	0	0	0	1	0	0	0	0	0	0	0	0	0	0	1
Apprch %	0	0	0	0		100	0	0	0		0	0	0	0		0	0	0	0		
Total %	0	0	0	0	0	100	0	0	0	100	0	0	0	0	0	0	0	0	0	0	

	N Fenwick Southbound				US 50 Westbound				S Fenwick Northbound				US 50 Eastbound				
Start Time	Right	Thru	Left	App. Total	Right	Thru	Left	App. Total	Right	Thru	Left	App. Total	Right	Thru	Left	App. Total	Int. Total
Peak Hour Analysis From 03:30 PM to 06:15 PM - Peak 1 of 1																	
Peak Hour for Entire Intersection Begins at 03:30 PM																	
03:30 PM	0	0	0	0	**1**	0	0	**1**	0	0	0	0	0	0	0	0	**1**
03:45 PM	0	0	0	0	0	0	0	0	0	0	0	0	0	0	0	0	0
04:00 PM	0	0	0	0	0	0	0	0	0	0	0	0	0	0	0	0	0
04:15 PM	0	0	0	0	0	0	0	0	0	0	0	0	0	0	0	0	0
Total Volume	0	0	0	0	1	0	0	1	0	0	0	0	0	0	0	0	1
% App. Total	0	0	0		100	0	0		0	0	0		0	0	0		
PHF	.000	.000	.000	.000	.250	.000	.000	.250	.000	.000	.000	.000	.000	.000	.000	.000	.250

Peggy Malone & Associates, Inc.

(888) 247-8602

File Name : 9-Fenwick St and US 50 PM
Site Code :
Start Date : 5/29/2019
Page No : 1

Groups Printed- Bicycles on Crosswalk

	N Fenwick Southbound					US 50 Westbound					S Fenwick Northbound					US 50 Eastbound					
Start Time	Right	Thru	Left	Peds	App. Total	Right	Thru	Left	Peds	App. Total	Right	Thru	Left	Peds	App. Total	Right	Thru	Left	Peds	App. Total	Int. Total
03:30 PM	0	0	0	0	0	0	0	0	0	0	0	0	0	0	0	0	0	0	0	0	0
03:45 PM	0	0	0	0	0	0	0	0	0	0	0	0	0	0	0	0	0	0	0	0	0
Total	0	0	0	0	0	0	0	0	0	0	0	0	0	0	0	0	0	0	0	0	0
04:00 PM	0	0	0	0	0	0	0	0	0	0	0	0	0	0	0	0	0	0	0	0	0
04:15 PM	0	0	0	0	0	0	0	0	0	0	0	0	0	0	0	0	0	0	0	0	0
04:30 PM	0	0	0	0	0	0	0	0	0	0	0	0	0	0	0	0	0	0	0	0	0
04:45 PM	0	0	0	0	0	0	0	0	0	0	0	0	0	0	0	0	0	0	0	0	0
Total	0	0	0	0	0	0	0	0	0	0	0	0	0	0	0	0	0	0	0	0	0
05:00 PM	0	0	0	0	0	0	0	0	0	0	0	0	0	0	0	0	0	0	0	0	0
05:15 PM	0	0	0	0	0	0	0	0	0	0	0	0	0	0	0	0	0	0	0	0	0
05:30 PM	0	0	0	0	0	0	0	0	0	0	0	0	0	0	0	0	0	0	0	0	0
05:45 PM	0	0	0	0	0	0	0	0	0	0	0	0	0	0	0	0	0	0	0	0	0
Total	0	0	0	0	0	0	0	0	0	0	0	0	0	0	0	0	0	0	0	0	0
06:00 PM	0	0	0	0	0	0	0	0	0	0	0	0	0	0	0	0	0	0	0	0	0
06:15 PM	0	0	0	0	0	0	0	0	0	0	0	0	0	1	1	0	0	0	0	0	1
Grand Total	0	0	0	0	0	0	0	0	0	0	0	0	0	1	1	0	0	0	0	0	1
Apprch %	0	0	0	0		0	0	0	0		0	0	0	100		0	0	0	0		
Total %	0	0	0	0	0	0	0	0	0	0	0	0	0	100	100	0	0	0	0	0	

	N Fenwick Southbound				US 50 Westbound				S Fenwick Northbound				US 50 Eastbound				
Start Time	Right	Thru	Left	App. Total	Right	Thru	Left	App. Total	Right	Thru	Left	App. Total	Right	Thru	Left	App. Total	Int. Total
Peak Hour Analysis From 03:30 PM to 06:15 PM - Peak 1 of 1																	
Peak Hour for Entire Intersection Begins at 03:30 PM																	
03:30 PM	0	0	0	0	0	0	0	0	0	0	0	0	0	0	0	0	0
03:45 PM	0	0	0	0	0	0	0	0	0	0	0	0	0	0	0	0	0
04:00 PM	0	0	0	0	0	0	0	0	0	0	0	0	0	0	0	0	0
04:15 PM	0	0	0	0	0	0	0	0	0	0	0	0	0	0	0	0	0
Total Volume	0	0	0	0	0	0	0	0	0	0	0	0	0	0	0	0	0
% App. Total	0	0	0		0	0	0		0	0	0		0	0	0		
PHF	.000	.000	.000	.000	.000	.000	.000	.000	.000	.000	.000	.000	.000	.000	.000	.000	.000

Peggy Malone & Associates, Inc.

(888) 247-8602

File Name : 9-Fenwick St and US 50 PM
Site Code :
Start Date : 5/29/2019
Page No : 1

Groups Printed- Combined

	N Fenwick Southbound					US 50 Westbound					S Fenwick Northbound					US 50 Eastbound					
Start Time	Right	Thru	Left	Peds	App. Total	Right	Thru	Left	Peds	App. Total	Right	Thru	Left	Peds	App. Total	Right	Thru	Left	Peds	App. Total	Int. Total
03:30 PM	0	0	0	0	0	1	0	0	0	1	0	0	0	0	0	5	0	0	0	5	6
03:45 PM	0	0	0	0	0	0	0	0	0	0	0	0	0	0	0	3	0	1	0	4	4
Total	0	0	0	0	0	1	0	0	0	1	0	0	0	0	0	8	0	1	0	9	10
04:00 PM	1	0	0	0	1	0	0	0	0	0	0	0	0	1	1	6	0	1	0	7	9
04:15 PM	1	0	0	0	1	0	0	0	0	0	1	0	0	0	1	0	0	1	0	1	3
04:30 PM	1	0	0	0	1	0	0	0	0	0	2	0	0	0	2	0	0	1	0	1	4
04:45 PM	0	0	0	1	1	0	0	0	0	0	0	0	0	0	0	5	0	2	0	7	8
Total	3	0	0	1	4	0	0	0	0	0	3	0	0	1	4	11	0	5	0	16	24
05:00 PM	0	0	0	0	0	1	0	0	0	1	3	0	0	0	3	3	0	1	0	4	8
05:15 PM	1	0	0	0	1	0	0	0	0	0	2	0	1	0	3	1	0	0	0	1	5
05:30 PM	1	0	0	0	1	0	0	0	0	0	1	0	0	2	3	7	0	0	0	7	11
05:45 PM	2	0	0	0	2	0	0	0	0	0	2	0	0	2	4	5	0	1	0	6	12
Total	4	0	0	0	4	1	0	0	0	1	8	0	1	4	13	16	0	2	0	18	36
06:00 PM	0	0	0	1	1	1	0	0	0	1	4	0	0	3	7	3	0	0	0	3	12
06:15 PM	2	0	0	0	2	0	0	0	0	0	1	0	0	1	2	0	0	1	0	1	5
Grand Total	9	0	0	2	11	3	0	0	0	3	16	0	1	9	26	38	0	9	0	47	87
Apprch %	81.8	0	0	18.2		100	0	0	0		61.5	0	3.8	34.6		80.9	0	19.1	0		
Total %	10.3	0	0	2.3	12.6	3.4	0	0	0	3.4	18.4	0	1.1	10.3	29.9	43.7	0	10.3	0	54	

	N Fenwick Southbound				US 50 Westbound				S Fenwick Northbound				US 50 Eastbound				
Start Time	Right	Thru	Left	App. Total	Right	Thru	Left	App. Total	Right	Thru	Left	App. Total	Right	Thru	Left	App. Total	Int. Total
Peak Hour Analysis From 03:30 PM to 06:15 PM - Peak 1 of 1																	
Peak Hour for Entire Intersection Begins at 05:00 PM																	
05:00 PM	0	0	0	0	**1**	0	0	**1**	**3**	0	0	**3**	3	0	**1**	4	8
05:15 PM	1	0	0	1	0	0	0	0	2	0	**1**	3	1	0	0	1	5
05:30 PM	1	0	0	1	0	0	0	0	1	0	0	1	**7**	0	0	**7**	9
05:45 PM	**2**	0	0	**2**	0	0	0	0	2	0	0	2	5	0	1	6	**10**
Total Volume	4	0	0	4	1	0	0	1	8	0	1	9	16	0	2	18	32
% App. Total	100	0	0		100	0	0		88.9	0	11.1		88.9	0	11.1		
PHF	.500	.000	.000	.500	.250	.000	.000	.250	.667	.000	.250	.750	.571	.000	.500	.643	.800

Peggy Malone & Associates, Inc.

(888) 247-8602

File Name : 10-Filmore St and US 50 AM
Site Code :
Start Date : 5/29/2019
Page No : 1

Groups Printed- Car

	N Fillmore Southbound					US 50 Westbound					S Fillmore Northbound					US 50 Eastbound					
Start Time	Right	Thru	Left	Peds	App. Total	Right	Thru	Left	Peds	App. Total	Right	Thru	Left	Peds	App. Total	Right	Thru	Left	Peds	App. Total	Int. Total
06:30 AM	4	2	2	0	8	0	250	8	2	260	45	7	17	0	69	7	770	2	2	781	1118
06:45 AM	5	1	2	2	10	3	292	15	0	310	62	10	9	0	81	11	800	3	2	816	1217
Total	9	3	4	2	18	3	542	23	2	570	107	17	26	0	150	18	1570	5	4	1597	2335
07:00 AM	3	8	2	0	13	5	368	13	2	388	51	14	7	1	73	9	821	4	3	837	1311
07:15 AM	9	5	4	1	19	3	421	14	2	440	60	10	19	0	89	10	870	4	1	885	1433
07:30 AM	6	9	4	0	19	4	404	21	1	430	80	16	20	1	117	9	809	11	0	829	1395
07:45 AM	11	3	3	0	17	3	463	21	0	487	73	16	13	0	102	5	841	5	0	851	1457
Total	29	25	13	1	68	15	1656	69	5	1745	264	56	59	2	381	33	3341	24	4	3402	5596
08:00 AM	14	19	8	3	44	12	417	18	19	466	62	16	15	2	95	6	846	6	1	859	1464
08:15 AM	13	12	11	0	36	4	400	27	3	434	65	10	18	0	93	9	865	5	0	879	1442
08:30 AM	5	14	6	0	25	4	402	20	1	427	63	8	12	2	85	7	892	2	1	902	1439
08:45 AM	5	15	6	0	26	3	385	27	2	417	85	14	17	0	116	9	798	3	1	811	1370
Total	37	60	31	3	131	23	1604	92	25	1744	275	48	62	4	389	31	3401	16	3	3451	5715
09:00 AM	3	7	2	2	14	3	340	16	0	359	63	8	23	0	94	13	856	2	0	871	1338
09:15 AM	1	10	3	0	14	1	318	22	2	343	52	15	24	1	92	8	789	10	0	807	1256
Grand Total	79	105	53	8	245	45	4460	222	34	4761	761	144	194	7	1106	103	9957	57	11	10128	16240
Apprch %	32.2	42.9	21.6	3.3		0.9	93.7	4.7	0.7		68.8	13	17.5	0.6		1	98.3	0.6	0.1		
Total %	0.5	0.6	0.3	0	1.5	0.3	27.5	1.4	0.2	29.3	4.7	0.9	1.2	0	6.8	0.6	61.3	0.4	0.1	62.4	

	N Fillmore Southbound				US 50 Westbound				S Fillmore Northbound				US 50 Eastbound				
Start Time	Right	Thru	Left	App. Total	Right	Thru	Left	App. Total	Right	Thru	Left	App. Total	Right	Thru	Left	App. Total	Int. Total
Peak Hour Analysis From 06:30 AM to 09:15 AM - Peak 1 of 1																	
Peak Hour for Entire Intersection Begins at 07:45 AM																	
07:45 AM	11	3	3	17	3	**463**	21	**487**	**73**	**16**	13	**102**	5	841	5	851	**1457**
08:00 AM	**14**	**19**	8	**41**	**12**	417	18	447	62	16	15	93	6	846	**6**	858	1439
08:15 AM	13	12	**11**	36	4	400	**27**	431	65	10	**18**	93	**9**	865	5	879	1439
08:30 AM	5	14	6	25	4	402	20	426	63	8	12	83	7	**892**	2	**901**	1435
Total Volume	43	48	28	119	23	1682	86	1791	263	50	58	371	27	3444	18	3489	5770
% App. Total	36.1	40.3	23.5		1.3	93.9	4.8		70.9	13.5	15.6		0.8	98.7	0.5		
PHF	.768	.632	.636	.726	.479	.908	.796	.919	.901	.781	.806	.909	.750	.965	.750	.968	.990

Peggy Malone & Associates, Inc.

(888) 247-8602

File Name : 10-Filmore St and US 50 AM
Site Code :
Start Date : 5/29/2019
Page No : 1

Groups Printed- Truck

	N Fillmore Southbound					US 50 Westbound					S Fillmore Northbound					US 50 Eastbound					
Start Time	Right	Thru	Left	Peds	App. Total	Right	Thru	Left	Peds	App. Total	Right	Thru	Left	Peds	App. Total	Right	Thru	Left	Peds	App. Total	Int. Total
06:30 AM	0	0	0	0	0	0	3	1	0	4	1	1	0	0	2	0	14	0	0	14	20
06:45 AM	0	0	1	0	1	0	5	0	0	5	1	2	1	0	4	0	10	0	0	10	20
Total	0	0	1	0	1	0	8	1	0	9	2	3	1	0	6	0	24	0	0	24	40
07:00 AM	0	0	0	0	0	0	9	0	0	9	1	1	0	0	2	0	8	0	0	8	19
07:15 AM	0	2	0	0	2	0	10	0	0	10	4	0	0	0	4	0	14	0	0	14	30
07:30 AM	0	1	1	0	2	1	10	0	0	11	0	2	1	0	3	1	11	0	0	12	28
07:45 AM	1	1	0	0	2	1	8	0	0	9	0	0	0	0	0	1	21	2	0	24	35
Total	1	4	1	0	6	2	37	0	0	39	5	3	1	0	9	2	54	2	0	58	112
08:00 AM	1	3	0	0	4	1	14	0	0	15	3	0	1	0	4	1	7	1	0	9	32
08:15 AM	1	0	0	0	1	0	7	0	0	7	2	3	1	0	6	0	11	0	0	11	25
08:30 AM	0	1	1	0	2	0	7	0	0	7	5	2	0	0	7	0	17	0	0	17	33
08:45 AM	0	1	0	0	1	0	11	1	0	12	1	0	2	0	3	0	12	0	0	12	28
Total	2	5	1	0	8	1	39	1	0	41	11	5	4	0	20	1	47	1	0	49	118
09:00 AM	0	2	0	0	2	1	11	1	0	13	0	0	3	0	3	0	14	1	0	15	33
09:15 AM	0	1	0	0	1	0	9	0	0	9	0	0	2	0	2	0	13	0	0	13	25
Grand Total	3	12	3	0	18	4	104	3	0	111	18	11	11	0	40	3	152	4	0	159	328
Apprch %	16.7	66.7	16.7	0		3.6	93.7	2.7	0		45	27.5	27.5	0		1.9	95.6	2.5	0		
Total %	0.9	3.7	0.9	0	5.5	1.2	31.7	0.9	0	33.8	5.5	3.4	3.4	0	12.2	0.9	46.3	1.2	0	48.5	

	N Fillmore Southbound				US 50 Westbound				S Fillmore Northbound				US 50 Eastbound				
Start Time	Right	Thru	Left	App. Total	Right	Thru	Left	App. Total	Right	Thru	Left	App. Total	Right	Thru	Left	App. Total	Int. Total
Peak Hour Analysis From 06:30 AM to 09:15 AM - Peak 1 of 1																	
Peak Hour for Entire Intersection Begins at 07:15 AM																	
07:15 AM	0	2	0	2	0	10	0	10	**4**	0	0	**4**	0	14	0	14	30
07:30 AM	0	1	**1**	2	**1**	10	0	11	0	**2**	**1**	3	**1**	11	0	12	28
07:45 AM	**1**	1	0	2	1	8	0	9	0	0	0	0	1	**21**	**2**	**24**	**35**
08:00 AM	1	**3**	0	**4**	1	**14**	0	**15**	3	0	1	4	1	7	1	9	32
Total Volume	2	7	1	10	3	42	0	45	7	2	2	11	3	53	3	59	125
% App. Total	20	70	10		6.7	93.3	0		63.6	18.2	18.2		5.1	89.8	5.1		
PHF	.500	.583	.250	.625	.750	.750	.000	.750	.438	.250	.500	.688	.750	.631	.375	.615	.893

Peggy Malone & Associates, Inc.

(888) 247-8602

File Name : 10-Filmore St and US 50 AM
Site Code :
Start Date : 5/29/2019
Page No : 1

Groups Printed- Bicycles on Crosswalk

	N Fillmore Southbound					US 50 Westbound					S Fillmore Northbound					US 50 Eastbound					
Start Time	Right	Thru	Left	Peds	App. Total	Right	Thru	Left	Peds	App. Total	Right	Thru	Left	Peds	App. Total	Right	Thru	Left	Peds	App. Total	Int. Total
06:30 AM	0	0	0	0	0	0	0	0	0	0	0	0	0	0	0	0	0	0	0	0	0
06:45 AM	0	0	0	0	0	0	0	0	0	0	0	0	0	0	0	0	0	0	0	0	0
Total	0	0	0	0	0	0	0	0	0	0	0	0	0	0	0	0	0	0	0	0	0
07:00 AM	0	0	0	0	0	0	0	0	0	0	0	0	0	0	0	0	0	0	1	1	1
07:15 AM	0	0	0	0	0	0	0	0	1	1	0	0	0	0	0	0	0	0	1	1	2
07:30 AM	0	0	0	0	0	0	0	0	1	1	0	0	0	0	0	0	0	0	2	2	3
07:45 AM	0	0	0	0	0	0	0	0	3	3	0	0	0	0	0	0	0	0	0	0	3
Total	0	0	0	0	0	0	0	0	5	5	0	0	0	0	0	0	0	0	4	4	9
08:00 AM	0	0	0	0	0	0	0	0	1	1	0	0	0	0	0	0	0	0	1	1	2
08:15 AM	0	0	0	0	0	0	0	0	2	2	0	0	0	0	0	0	0	0	0	0	2
08:30 AM	0	0	0	0	0	0	0	0	3	3	0	0	0	0	0	0	0	0	0	0	3
08:45 AM	0	0	0	0	0	0	0	0	0	0	0	0	0	0	0	0	0	0	0	0	0
Total	0	0	0	0	0	0	0	0	6	6	0	0	0	0	0	0	0	0	1	1	7
09:00 AM	0	0	0	0	0	0	0	0	1	1	0	0	0	0	0	0	0	0	0	0	1
09:15 AM	0	0	0	0	0	0	0	0	0	0	0	0	0	0	0	0	0	0	0	0	0
Grand Total	0	0	0	0	0	0	0	0	12	12	0	0	0	0	0	0	0	0	5	5	17
Apprch %	0	0	0	0		0	0	0	100		0	0	0	0		0	0	0	100		
Total %	0	0	0	0	0	0	0	0	70.6	70.6	0	0	0	0	0	0	0	0	29.4	29.4	

	N Fillmore Southbound				US 50 Westbound				S Fillmore Northbound				US 50 Eastbound				
Start Time	Right	Thru	Left	App. Total	Right	Thru	Left	App. Total	Right	Thru	Left	App. Total	Right	Thru	Left	App. Total	Int. Total
Peak Hour Analysis From 06:30 AM to 09:15 AM - Peak 1 of 1																	
Peak Hour for Entire Intersection Begins at 06:30 AM																	
06:30 AM	0	0	0	0	0	0	0	0	0	0	0	0	0	0	0	0	0
06:45 AM	0	0	0	0	0	0	0	0	0	0	0	0	0	0	0	0	0
07:00 AM	0	0	0	0	0	0	0	0	0	0	0	0	0	0	0	0	0
07:15 AM	0	0	0	0	0	0	0	0	0	0	0	0	0	0	0	0	0
Total Volume	0	0	0	0	0	0	0	0	0	0	0	0	0	0	0	0	0
% App. Total	0	0	0		0	0	0		0	0	0		0	0	0		
PHF	.000	.000	.000	.000	.000	.000	.000	.000	.000	.000	.000	.000	.000	.000	.000	.000	.000

Peggy Malone & Associates, Inc.

(888) 247-8602

File Name : 10-Filmore St and US 50 AM
Site Code :
Start Date : 5/29/2019
Page No : 1

Groups Printed- Combined

	N Fillmore Southbound					US 50 Westbound					S Fillmore Northbound					US 50 Eastbound					
Start Time	Right	Thru	Left	Peds	App. Total	Right	Thru	Left	Peds	App. Total	Right	Thru	Left	Peds	App. Total	Right	Thru	Left	Peds	App. Total	Int. Total
06:30 AM	4	2	2	0	8	0	253	9	2	264	46	8	17	0	71	7	784	2	2	795	1138
06:45 AM	5	1	3	2	11	3	297	15	0	315	63	12	10	0	85	11	810	3	2	826	1237
Total	9	3	5	2	19	3	550	24	2	579	109	20	27	0	156	18	1594	5	4	1621	2375
07:00 AM	3	8	2	0	13	5	377	13	2	397	52	15	7	1	75	9	829	4	4	846	1331
07:15 AM	9	7	4	1	21	3	431	14	3	451	64	10	19	0	93	10	884	4	2	900	1465
07:30 AM	6	10	5	0	21	5	414	21	2	442	80	18	21	1	120	10	820	11	2	843	1426
07:45 AM	12	4	3	0	19	4	471	21	3	499	73	16	13	0	102	6	862	7	0	875	1495
Total	30	29	14	1	74	17	1693	69	10	1789	269	59	60	2	390	35	3395	26	8	3464	5717
08:00 AM	15	22	8	3	48	13	431	18	20	482	65	16	16	2	99	7	853	7	2	869	1498
08:15 AM	14	12	11	0	37	4	407	27	5	443	67	13	19	0	99	9	876	5	0	890	1469
08:30 AM	5	15	7	0	27	4	409	20	4	437	68	10	12	2	92	7	909	2	1	919	1475
08:45 AM	5	16	6	0	27	3	396	28	2	429	86	14	19	0	119	9	810	3	1	823	1398
Total	39	65	32	3	139	24	1643	93	31	1791	286	53	66	4	409	32	3448	17	4	3501	5840
09:00 AM	3	9	2	2	16	4	351	17	1	373	63	8	26	0	97	13	870	3	0	886	1372
09:15 AM	1	11	3	0	15	1	327	22	2	352	52	15	26	1	94	8	802	10	0	820	1281
Grand Total	82	117	56	8	263	49	4564	225	46	4884	779	155	205	7	1146	106	10109	61	16	10292	16585
Apprch %	31.2	44.5	21.3	3		1	93.4	4.6	0.9		68	13.5	17.9	0.6		1	98.2	0.6	0.2		
Total %	0.5	0.7	0.3	0	1.6	0.3	27.5	1.4	0.3	29.4	4.7	0.9	1.2	0	6.9	0.6	61	0.4	0.1	62.1	

	N Fillmore Southbound				US 50 Westbound				S Fillmore Northbound				US 50 Eastbound				
Start Time	Right	Thru	Left	App. Total	Right	Thru	Left	App. Total	Right	Thru	Left	App. Total	Right	Thru	Left	App. Total	Int. Total
Peak Hour Analysis From 06:30 AM to 09:15 AM - Peak 1 of 1																	
Peak Hour for Entire Intersection Begins at 07:45 AM																	
07:45 AM	12	4	3	19	4	**471**	21	**496**	**73**	**16**	13	**102**	6	862	**7**	875	**1492**
08:00 AM	**15**	**22**	8	**45**	**13**	431	18	462	65	16	16	97	7	853	7	867	1471
08:15 AM	14	12	**11**	37	4	407	**27**	438	67	13	**19**	99	**9**	876	5	890	1464
08:30 AM	5	15	7	27	4	409	20	433	68	10	12	90	7	**909**	2	**918**	1468
Total Volume	46	53	29	128	25	1718	86	1829	273	55	60	388	29	3500	21	3550	5895
% App. Total	35.9	41.4	22.7		1.4	93.9	4.7		70.4	14.2	15.5		0.8	98.6	0.6		
PHF	.767	.602	.659	.711	.481	.912	.796	.922	.935	.859	.789	.951	.806	.963	.750	.967	.988

Peggy Malone & Associates, Inc.

(888) 247-8602

File Name : 10-Filmore St and US 50 PM
Site Code :
Start Date : 5/29/2019
Page No : 1

Groups Printed- Car

	N Fillmore Southbound					US 50 Westbound					S Fillmore Northbound					US 50 Eastbound					
Start Time	Right	Thru	Left	Peds	App. Total	Right	Thru	Left	Peds	App. Total	Right	Thru	Left	Peds	App. Total	Right	Thru	Left	Peds	App. Total	Int. Total
03:30 PM	12	24	4	0	40	2	691	64	0	757	35	15	31	0	81	25	493	8	0	526	1404
03:45 PM	14	16	7	0	37	9	649	63	1	722	27	14	29	0	70	15	478	17	0	510	1339
Total	26	40	11	0	77	11	1340	127	1	1479	62	29	60	0	151	40	971	25	0	1036	2743
04:00 PM	11	15	7	1	34	7	710	76	1	794	46	16	39	0	101	18	482	10	1	511	1440
04:15 PM	11	19	2	0	32	5	703	71	0	779	39	16	29	0	84	12	586	5	0	603	1498
04:30 PM	10	18	3	0	31	1	659	76	1	737	34	23	35	0	92	9	491	8	4	512	1372
04:45 PM	16	25	3	0	44	6	704	79	0	789	35	17	34	0	86	10	561	12	1	584	1503
Total	48	77	15	1	141	19	2776	302	2	3099	154	72	137	0	363	49	2120	35	6	2210	5813
05:00 PM	29	36	5	0	70	1	690	79	0	770	42	20	35	0	97	13	472	15	0	500	1437
05:15 PM	8	36	3	0	47	3	721	83	0	807	44	14	29	0	87	12	558	14	0	584	1525
05:30 PM	20	33	8	2	63	1	641	88	7	737	51	15	38	0	104	16	474	11	2	503	1407
05:45 PM	12	31	4	0	47	3	731	95	4	833	45	12	37	0	94	13	512	17	0	542	1516
Total	69	136	20	2	227	8	2783	345	11	3147	182	61	139	0	382	54	2016	57	2	2129	5885
06:00 PM	10	38	6	1	55	2	659	71	1	733	42	15	24	0	81	19	501	14	2	536	1405
06:15 PM	9	24	2	2	37	2	703	90	1	796	36	13	36	0	85	22	465	11	0	498	1416
Grand Total	162	315	54	6	537	42	8261	935	16	9254	476	190	396	0	1062	184	6073	142	10	6409	17262
Apprch %	30.2	58.7	10.1	1.1		0.5	89.3	10.1	0.2		44.8	17.9	37.3	0		2.9	94.8	2.2	0.2		
Total %	0.9	1.8	0.3	0	3.1	0.2	47.9	5.4	0.1	53.6	2.8	1.1	2.3	0	6.2	1.1	35.2	0.8	0.1	37.1	

	N Fillmore Southbound				US 50 Westbound				S Fillmore Northbound				US 50 Eastbound				
Start Time	Right	Thru	Left	App. Total	Right	Thru	Left	App. Total	Right	Thru	Left	App. Total	Right	Thru	Left	App. Total	Int. Total
Peak Hour Analysis From 03:30 PM to 06:15 PM - Peak 1 of 1																	
Peak Hour for Entire Intersection Begins at 05:00 PM																	
05:00 PM	**29**	**36**	5	**70**	1	690	79	770	42	**20**	35	97	13	472	15	500	1437
05:15 PM	8	36	3	47	**3**	721	83	807	44	14	29	87	12	**558**	14	**584**	**1525**
05:30 PM	20	33	**8**	61	1	641	88	730	**51**	15	**38**	**104**	**16**	474	11	501	1396
05:45 PM	12	31	4	47	3	**731**	**95**	**829**	45	12	37	94	13	512	**17**	542	1512
Total Volume	69	136	20	225	8	2783	345	3136	182	61	139	382	54	2016	57	2127	5870
% App. Total	30.7	60.4	8.9		0.3	88.7	11		47.6	16	36.4		2.5	94.8	2.7		
PHF	.595	.944	.625	.804	.667	.952	.908	.946	.892	.763	.914	.918	.844	.903	.838	.911	.962

Peggy Malone & Associates, Inc.

(888) 247-8602

File Name : 10-Filmore St and US 50 PM
Site Code :
Start Date : 5/29/2019
Page No : 1

Groups Printed- Truck

	N Fillmore Southbound					US 50 Westbound					S Fillmore Northbound					US 50 Eastbound					
Start Time	Right	Thru	Left	Peds	App. Total	Right	Thru	Left	Peds	App. Total	Right	Thru	Left	Peds	App. Total	Right	Thru	Left	Peds	App. Total	Int. Total
03:30 PM	2	0	0	0	2	0	11	2	0	13	1	0	0	0	1	0	12	0	0	12	28
03:45 PM	0	0	0	0	0	0	13	0	0	13	1	0	1	0	2	0	9	0	0	9	24
Total	2	0	0	0	2	0	24	2	0	26	2	0	1	0	3	0	21	0	0	21	52
04:00 PM	0	2	0	0	2	0	11	1	0	12	0	1	0	0	1	0	10	0	0	10	25
04:15 PM	0	4	1	0	5	0	13	4	0	17	1	0	0	0	1	1	12	0	0	13	36
04:30 PM	0	3	0	0	3	0	4	2	0	6	0	2	0	0	2	0	17	0	0	17	28
04:45 PM	0	1	0	0	1	0	11	1	0	12	0	0	0	0	0	1	13	0	0	14	27
Total	0	10	1	0	11	0	39	8	0	47	1	3	0	0	4	2	52	0	0	54	116
05:00 PM	0	0	0	0	0	0	4	1	0	5	0	0	0	0	0	1	7	0	0	8	13
05:15 PM	0	1	0	0	1	0	7	0	0	7	0	0	0	0	0	0	12	0	0	12	20
05:30 PM	0	1	0	0	1	0	4	0	0	4	0	0	0	0	0	0	10	0	0	10	15
05:45 PM	0	0	0	0	0	0	5	2	0	7	0	0	0	0	0	0	10	0	0	10	17
Total	0	2	0	0	2	0	20	3	0	23	0	0	0	0	0	1	39	0	0	40	65
06:00 PM	0	0	0	0	0	0	5	2	0	7	1	0	0	0	1	1	8	0	0	9	17
06:15 PM	0	0	0	0	0	0	4	0	0	4	0	0	0	0	0	0	6	0	0	6	10
Grand Total	2	12	1	0	15	0	92	15	0	107	4	3	1	0	8	4	126	0	0	130	260
Apprch %	13.3	80	6.7	0		0	86	14	0		50	37.5	12.5	0		3.1	96.9	0	0		
Total %	0.8	4.6	0.4	0	5.8	0	35.4	5.8	0	41.2	1.5	1.2	0.4	0	3.1	1.5	48.5	0	0	50	

	N Fillmore Southbound				US 50 Westbound				S Fillmore Northbound				US 50 Eastbound				
Start Time	Right	Thru	Left	App. Total	Right	Thru	Left	App. Total	Right	Thru	Left	App. Total	Right	Thru	Left	App. Total	Int. Total
Peak Hour Analysis From 03:30 PM to 06:15 PM - Peak 1 of 1																	
Peak Hour for Entire Intersection Begins at 04:00 PM																	
04:00 PM	0	2	0	2	0	11	1	12	0	1	0	1	0	10	0	10	25
04:15 PM	0	**4**	**1**	**5**	0	**13**	**4**	**17**	**1**	0	0	1	**1**	12	0	13	**36**
04:30 PM	0	3	0	3	0	4	2	6	0	**2**	0	**2**	0	**17**	0	**17**	28
04:45 PM	0	1	0	1	0	11	1	12	0	0	0	0	1	13	0	14	27
Total Volume	0	10	1	11	0	39	8	47	1	3	0	4	2	52	0	54	116
% App. Total	0	90.9	9.1		0	83	17		25	75	0		3.7	96.3	0		
PHF	.000	.625	.250	.550	.000	.750	.500	.691	.250	.375	.000	.500	.500	.765	.000	.794	.806

Peggy Malone & Associates, Inc.

(888) 247-8602

File Name : 10-Filmore St and US 50 PM
Site Code :
Start Date : 5/29/2019
Page No : 1

Groups Printed- Bicycles on Crosswalk

	N Fillmore Southbound					US 50 Westbound					S Fillmore Northbound					US 50 Eastbound					
Start Time	Right	Thru	Left	Peds	App. Total	Right	Thru	Left	Peds	App. Total	Right	Thru	Left	Peds	App. Total	Right	Thru	Left	Peds	App. Total	Int. Total
03:30 PM	0	0	0	1	1	0	0	0	0	0	0	0	0	1	1	0	0	0	1	1	3
03:45 PM	0	0	0	0	0	0	0	0	3	3	0	0	0	1	1	0	0	0	0	0	4
Total	0	0	0	1	1	0	0	0	3	3	0	0	0	2	2	0	0	0	1	1	7
04:00 PM	0	0	0	1	1	0	0	0	0	0	0	0	0	0	0	0	0	0	0	0	1
04:15 PM	0	0	0	0	0	0	0	0	0	0	0	0	0	0	0	0	0	0	0	0	0
04:30 PM	0	0	0	1	1	0	0	0	0	0	0	0	0	0	0	0	0	0	1	1	2
04:45 PM	0	0	0	0	0	0	0	0	0	0	0	0	0	0	0	0	0	0	0	0	0
Total	0	0	0	2	2	0	0	0	0	0	0	0	0	0	0	0	0	0	1	1	3
05:00 PM	0	0	0	0	0	0	0	0	0	0	0	0	0	0	0	0	0	0	1	1	1
05:15 PM	0	0	0	0	0	0	0	0	0	0	0	0	0	0	0	0	0	0	0	0	0
05:30 PM	0	0	0	0	0	0	0	0	0	0	0	0	0	0	0	0	0	0	0	0	0
05:45 PM	0	0	0	1	1	0	0	0	0	0	0	0	0	0	0	0	0	0	0	0	1
Total	0	0	0	1	1	0	0	0	0	0	0	0	0	0	0	0	0	0	1	1	2
06:00 PM	0	0	0	0	0	0	0	0	1	1	0	0	0	0	0	0	0	0	2	2	3
06:15 PM	0	0	0	1	1	0	0	0	2	2	0	0	0	0	0	0	0	0	1	1	4
Grand Total	0	0	0	5	5	0	0	0	6	6	0	0	0	2	2	0	0	0	6	6	19
Apprch %	0	0	0	100		0	0	0	100		0	0	0	100		0	0	0	100		
Total %	0	0	0	26.3	26.3	0	0	0	31.6	31.6	0	0	0	10.5	10.5	0	0	0	31.6	31.6	

	N Fillmore Southbound				US 50 Westbound				S Fillmore Northbound				US 50 Eastbound				
Start Time	Right	Thru	Left	App. Total	Right	Thru	Left	App. Total	Right	Thru	Left	App. Total	Right	Thru	Left	App. Total	Int. Total
Peak Hour Analysis From 03:30 PM to 06:15 PM - Peak 1 of 1																	
Peak Hour for Entire Intersection Begins at 03:30 PM																	
03:30 PM	0	0	0	0	0	0	0	0	0	0	0	0	0	0	0	0	0
03:45 PM	0	0	0	0	0	0	0	0	0	0	0	0	0	0	0	0	0
04:00 PM	0	0	0	0	0	0	0	0	0	0	0	0	0	0	0	0	0
04:15 PM	0	0	0	0	0	0	0	0	0	0	0	0	0	0	0	0	0
Total Volume	0	0	0	0	0	0	0	0	0	0	0	0	0	0	0	0	0
% App. Total	0	0	0		0	0	0		0	0	0		0	0	0		
PHF	.000	.000	.000	.000	.000	.000	.000	.000	.000	.000	.000	.000	.000	.000	.000	.000	.000

Peggy Malone & Associates, Inc.

(888) 247-8602

File Name : 10-Filmore St and US 50 PM
Site Code :
Start Date : 5/29/2019
Page No : 1

Groups Printed- Combined

	N Fillmore Southbound					US 50 Westbound					S Fillmore Northbound					US 50 Eastbound					
Start Time	Right	Thru	Left	Peds	App. Total	Right	Thru	Left	Peds	App. Total	Right	Thru	Left	Peds	App. Total	Right	Thru	Left	Peds	App. Total	Int. Total
03:30 PM	14	24	4	1	43	2	702	66	0	770	36	15	31	1	83	25	505	8	1	539	1435
03:45 PM	14	16	7	0	37	9	662	63	4	738	28	14	30	1	73	15	487	17	0	519	1367
Total	28	40	11	1	80	11	1364	129	4	1508	64	29	61	2	156	40	992	25	1	1058	2802
04:00 PM	11	17	7	2	37	7	721	77	1	806	46	17	39	0	102	18	492	10	1	521	1466
04:15 PM	11	23	3	0	37	5	716	75	0	796	40	16	29	0	85	13	598	5	0	616	1534
04:30 PM	10	21	3	1	35	1	663	78	1	743	34	25	35	0	94	9	508	8	5	530	1402
04:45 PM	16	26	3	0	45	6	715	80	0	801	35	17	34	0	86	11	574	12	1	598	1530
Total	48	87	16	3	154	19	2815	310	2	3146	155	75	137	0	367	51	2172	35	7	2265	5932
05:00 PM	29	36	5	0	70	1	694	80	0	775	42	20	35	0	97	14	479	15	1	509	1451
05:15 PM	8	37	3	0	48	3	728	83	0	814	44	14	29	0	87	12	570	14	0	596	1545
05:30 PM	20	34	8	2	64	1	645	88	7	741	51	15	38	0	104	16	484	11	2	513	1422
05:45 PM	12	31	4	1	48	3	736	97	4	840	45	12	37	0	94	13	522	17	0	552	1534
Total	69	138	20	3	230	8	2803	348	11	3170	182	61	139	0	382	55	2055	57	3	2170	5952
06:00 PM	10	38	6	1	55	2	664	73	2	741	43	15	24	0	82	20	509	14	4	547	1425
06:15 PM	9	24	2	3	38	2	707	90	3	802	36	13	36	0	85	22	471	11	1	505	1430
Grand Total	164	327	55	11	557	42	8353	950	22	9367	480	193	397	2	1072	188	6199	142	16	6545	17541
Apprch %	29.4	58.7	9.9	2		0.4	89.2	10.1	0.2		44.8	18	37	0.2		2.9	94.7	2.2	0.2		
Total %	0.9	1.9	0.3	0.1	3.2	0.2	47.6	5.4	0.1	53.4	2.7	1.1	2.3	0	6.1	1.1	35.3	0.8	0.1	37.3	

	N Fillmore Southbound				US 50 Westbound				S Fillmore Northbound				US 50 Eastbound				
Start Time	Right	Thru	Left	App. Total	Right	Thru	Left	App. Total	Right	Thru	Left	App. Total	Right	Thru	Left	App. Total	Int. Total
Peak Hour Analysis From 03:30 PM to 06:15 PM - Peak 1 of 1																	
Peak Hour for Entire Intersection Begins at 04:45 PM																	
04:45 PM	16	26	3	45	**6**	715	80	801	35	17	34	86	11	**574**	12	**597**	1529
05:00 PM	**29**	36	5	**70**	1	694	80	775	42	**20**	35	97	14	479	**15**	508	1450
05:15 PM	8	**37**	3	48	3	**728**	83	**814**	44	14	29	87	12	570	14	596	**1545**
05:30 PM	20	34	**8**	62	1	645	**88**	734	**51**	15	**38**	**104**	**16**	484	11	511	1411
Total Volume	73	133	19	225	11	2782	331	3124	172	66	136	374	53	2107	52	2212	5935
% App. Total	32.4	59.1	8.4		0.4	89.1	10.6		46	17.6	36.4		2.4	95.3	2.4		
PHF	.629	.899	.594	.804	.458	.955	.940	.959	.843	.825	.895	.899	.828	.918	.867	.926	.960

Peggy Malone & Associates, Inc.
(888) 247-8602

File Name : 11-Fillmore St and Arlington Blvd Svc Rd North AM
Site Code :
Start Date : 5/29/2019
Page No : 1

Groups Printed- Car

	N Fillmore Southbound				N Service Rd Westbound				N Fillmore Northbound					
Start Time	Thru	Left	Peds	App. Total	Right	Left	Peds	App. Total	Right	Thru	Left	Peds	App. Total	Int. Total
06:30 AM	7	0	0	7	1	0	1	2	0	9	0	0	9	18
06:45 AM	6	1	2	9	2	3	2	7	0	15	1	2	18	34
Total	13	1	2	16	3	3	3	9	0	24	1	2	27	52
07:00 AM	11	1	0	12	5	2	2	9	0	21	0	0	21	42
07:15 AM	12	3	0	15	5	6	1	12	0	15	0	1	16	43
07:30 AM	17	2	3	22	4	2	0	6	1	32	0	0	33	61
07:45 AM	16	0	1	17	1	0	0	1	1	24	0	0	25	43
Total	56	6	4	66	15	10	3	28	2	92	0	1	95	189
08:00 AM	33	2	0	35	7	1	17	25	0	32	0	0	32	92
08:15 AM	40	1	1	42	5	5	6	16	1	23	0	0	24	82
08:30 AM	22	1	0	23	4	2	1	7	2	11	0	0	13	43
08:45 AM	25	0	0	25	2	1	0	3	1	17	0	0	18	46
Total	120	4	1	125	18	9	24	51	4	83	0	0	87	263
09:00 AM	10	0	0	10	0	2	3	5	3	12	0	2	17	32
09:15 AM	9	0	0	9	4	3	1	8	1	23	0	0	24	41
Grand Total	208	11	7	226	40	27	34	101	10	234	1	5	250	577
Apprch %	92	4.9	3.1		39.6	26.7	33.7		4	93.6	0.4	2		
Total %	36	1.9	1.2	39.2	6.9	4.7	5.9	17.5	1.7	40.6	0.2	0.9	43.3	

	N Fillmore Southbound			N Service Rd Westbound			N Fillmore Northbound				
Start Time	Thru	Left	App. Total	Right	Left	App. Total	Right	Thru	Left	App. Total	Int. Total
Peak Hour Analysis From 06:30 AM to 09:15 AM - Peak 1 of 1											
Peak Hour for Entire Intersection Begins at 07:30 AM											
07:30 AM	17	**2**	19	4	2	6	**1**	**32**	0	**33**	58
07:45 AM	16	0	16	1	0	1	1	24	0	25	42
08:00 AM	33	2	35	**7**	1	8	0	32	0	32	**75**
08:15 AM	**40**	1	**41**	5	**5**	**10**	1	23	0	24	75
Total Volume	106	5	111	17	8	25	3	111	0	114	250
% App. Total	95.5	4.5		68	32		2.6	97.4	0		
PHF	.663	.625	.677	.607	.400	.625	.750	.867	.000	.864	.833

Peggy Malone & Associates, Inc.
(888) 247-8602

File Name : 11-Fillmore St and Arlington Blvd Svc Rd North AM
Site Code :
Start Date : 5/29/2019
Page No : 1

Groups Printed- Truck

	N Fillmore Southbound				N Service Rd Westbound				N Fillmore Northbound					
Start Time	Thru	Left	Peds	App. Total	Right	Left	Peds	App. Total	Right	Thru	Left	Peds	App. Total	Int. Total
06:30 AM	0	0	0	0	0	0	0	0	0	1	0	0	1	1
06:45 AM	1	0	0	1	0	0	0	0	1	1	0	0	2	3
Total	1	0	0	1	0	0	0	0	1	2	0	0	3	4
07:00 AM	0	0	0	0	0	0	0	0	0	1	0	0	1	1
07:15 AM	2	0	0	2	0	0	0	0	0	0	0	0	0	2
07:30 AM	2	0	0	2	0	0	0	0	0	3	0	0	3	5
07:45 AM	1	0	0	1	1	0	0	1	0	2	0	0	2	4
Total	5	0	0	5	1	0	0	1	0	6	0	0	6	12
08:00 AM	4	0	0	4	0	0	0	0	0	2	0	0	2	6
08:15 AM	0	0	0	0	0	1	0	1	1	1	0	0	2	3
08:30 AM	2	0	0	2	0	0	0	0	0	3	0	0	3	5
08:45 AM	1	0	0	1	0	0	0	0	0	0	0	0	0	1
Total	7	0	0	7	0	1	0	1	1	6	0	0	7	15
09:00 AM	2	0	0	2	0	0	0	0	0	2	0	0	2	4
09:15 AM	0	0	0	0	0	0	0	0	0	0	0	0	0	0
Grand Total	15	0	0	15	1	1	0	2	2	16	0	0	18	35
Apprch %	100	0	0		50	50	0		11.1	88.9	0	0		
Total %	42.9	0	0	42.9	2.9	2.9	0	5.7	5.7	45.7	0	0	51.4	

	N Fillmore Southbound			N Service Rd Westbound			N Fillmore Northbound				
Start Time	Thru	Left	App. Total	Right	Left	App. Total	Right	Thru	Left	App. Total	Int. Total
Peak Hour Analysis From 06:30 AM to 09:15 AM - Peak 1 of 1											
Peak Hour for Entire Intersection Begins at 07:30 AM											
07:30 AM	2	0	2	0	0	0	0	**3**	0	**3**	5
07:45 AM	1	0	1	**1**	0	**1**	0	2	0	2	4
08:00 AM	**4**	0	**4**	0	0	0	0	2	0	2	**6**
08:15 AM	0	0	0	0	**1**	1	**1**	1	0	2	3
Total Volume	7	0	7	1	1	2	1	8	0	9	18
% App. Total	100	0		50	50		11.1	88.9	0		
PHF	.438	.000	.438	.250	.250	.500	.250	.667	.000	.750	.750

Peggy Malone & Associates, Inc.
(888) 247-8602

File Name : 11-Fillmore St and Arlington Blvd Svc Rd North AM
Site Code :
Start Date : 5/29/2019
Page No : 1

Groups Printed- Bicycles on Crosswalk

	N Fillmore Southbound				N Service Rd Westbound				N Fillmore Northbound					
Start Time	Thru	Left	Peds	App. Total	Right	Left	Peds	App. Total	Right	Thru	Left	Peds	App. Total	Int. Total
06:30 AM	0	0	1	1	0	0	0	0	0	0	0	0	0	1
06:45 AM	0	0	0	0	0	0	0	0	0	0	0	0	0	0
Total	0	0	1	1	0	0	0	0	0	0	0	0	0	1
07:00 AM	0	0	0	0	0	0	0	0	0	0	0	0	0	0
07:15 AM	0	0	0	0	0	0	0	0	0	0	0	0	0	0
07:30 AM	0	0	1	1	0	0	0	0	0	0	0	0	0	1
07:45 AM	0	0	0	0	0	0	0	0	0	0	0	0	0	0
Total	0	0	1	1	0	0	0	0	0	0	0	0	0	1
08:00 AM	0	0	0	0	0	0	1	1	0	0	0	0	0	1
08:15 AM	0	0	0	0	0	0	0	0	0	0	0	0	0	0
08:30 AM	0	0	0	0	0	0	0	0	0	0	0	0	0	0
08:45 AM	0	0	0	0	0	0	0	0	0	0	0	0	0	0
Total	0	0	0	0	0	0	1	1	0	0	0	0	0	1
09:00 AM	0	0	0	0	0	0	1	1	0	0	0	0	0	1
09:15 AM	0	0	0	0	0	0	0	0	0	0	0	0	0	0
Grand Total	0	0	2	2	0	0	2	2	0	0	0	0	0	4
Apprch %	0	0	100		0	0	100		0	0	0	0		
Total %	0	0	50	50	0	0	50	50	0	0	0	0	0	

	N Fillmore Southbound			N Service Rd Westbound			N Fillmore Northbound				
Start Time	Thru	Left	App. Total	Right	Left	App. Total	Right	Thru	Left	App. Total	Int. Total
Peak Hour Analysis From 06:30 AM to 09:15 AM - Peak 1 of 1											
Peak Hour for Entire Intersection Begins at 06:30 AM											
06:30 AM	0	0	0	0	0	0	0	0	0	0	0
06:45 AM	0	0	0	0	0	0	0	0	0	0	0
07:00 AM	0	0	0	0	0	0	0	0	0	0	0
07:15 AM	0	0	0	0	0	0	0	0	0	0	0
Total Volume	0	0	0	0	0	0	0	0	0	0	0
% App. Total	0	0		0	0		0	0	0		
PHF	.000	.000	.000	.000	.000	.000	.000	.000	.000	.000	.000

Peggy Malone & Associates, Inc.

(888) 247-8602

File Name : 11-Fillmore St and Arlington Blvd Svc Rd North AM
Site Code :
Start Date : 5/29/2019
Page No : 1

Groups Printed- Combined

	N Fillmore Southbound				N Service Rd Westbound				N Fillmore Northbound					
Start Time	Thru	Left	Peds	App. Total	Right	Left	Peds	App. Total	Right	Thru	Left	Peds	App. Total	Int. Total
06:30 AM	7	0	1	8	1	0	1	2	0	10	0	0	10	20
06:45 AM	7	1	2	10	2	3	2	7	1	16	1	2	20	37
Total	14	1	3	18	3	3	3	9	1	26	1	2	30	57
07:00 AM	11	1	0	12	5	2	2	9	0	22	0	0	22	43
07:15 AM	14	3	0	17	5	6	1	12	0	15	0	1	16	45
07:30 AM	19	2	4	25	4	2	0	6	1	35	0	0	36	67
07:45 AM	17	0	1	18	2	0	0	2	1	26	0	0	27	47
Total	61	6	5	72	16	10	3	29	2	98	0	1	101	202
08:00 AM	37	2	0	39	7	1	18	26	0	34	0	0	34	99
08:15 AM	40	1	1	42	5	6	6	17	2	24	0	0	26	85
08:30 AM	24	1	0	25	4	2	1	7	2	14	0	0	16	48
08:45 AM	26	0	0	26	2	1	0	3	1	17	0	0	18	47
Total	127	4	1	132	18	10	25	53	5	89	0	0	94	279
09:00 AM	12	0	0	12	0	2	4	6	3	14	0	2	19	37
09:15 AM	9	0	0	9	4	3	1	8	1	23	0	0	24	41
Grand Total	223	11	9	243	41	28	36	105	12	250	1	5	268	616
Apprch %	91.8	4.5	3.7		39	26.7	34.3		4.5	93.3	0.4	1.9		
Total %	36.2	1.8	1.5	39.4	6.7	4.5	5.8	17	1.9	40.6	0.2	0.8	43.5	

	N Fillmore Southbound			N Service Rd Westbound			N Fillmore Northbound				
Start Time	Thru	Left	App. Total	Right	Left	App. Total	Right	Thru	Left	App. Total	Int. Total
Peak Hour Analysis From 06:30 AM to 09:15 AM - Peak 1 of 1											
Peak Hour for Entire Intersection Begins at 07:30 AM											
07:30 AM	19	**2**	21	4	2	6	1	**35**	0	**36**	63
07:45 AM	17	0	17	2	0	2	1	26	0	27	46
08:00 AM	37	2	39	**7**	1	8	0	34	0	34	**81**
08:15 AM	**40**	1	**41**	5	**6**	**11**	**2**	24	0	26	78
Total Volume	113	5	118	18	9	27	4	119	0	123	268
% App. Total	95.8	4.2		66.7	33.3		3.3	96.7	0		
PHF	.706	.625	.720	.643	.375	.614	.500	.850	.000	.854	.827

Peggy Malone & Associates, Inc.

(888) 247-8602

File Name : 11-Fillmore St and Arlington Blvd Svc Rd North PM
Site Code :
Start Date : 5/29/2019
Page No : 1

Groups Printed- Car

	N Fillmore Southbound				N Service Rd Westbound				N Fillmore Northbound					
Start Time	Thru	Left	Peds	App. Total	Right	Left	Peds	App. Total	Right	Thru	Left	Peds	App. Total	Int. Total
03:30 PM	34	1	0	35	5	5	2	12	1	23	0	0	24	71
03:45 PM	26	2	0	28	4	4	1	9	4	32	0	0	36	73
Total	60	3	0	63	9	9	3	21	5	55	0	0	60	144
04:00 PM	37	0	1	38	3	1	1	5	3	32	0	0	35	78
04:15 PM	30	0	3	33	7	0	1	8	3	21	0	0	24	65
04:30 PM	28	0	0	28	5	2	1	8	0	34	0	0	34	70
04:45 PM	45	0	1	46	4	0	0	4	8	27	0	0	35	85
Total	140	0	5	145	19	3	3	25	14	114	0	0	128	298
05:00 PM	65	1	0	66	5	5	0	10	4	32	0	0	36	112
05:15 PM	45	0	2	47	1	3	4	8	3	31	0	0	34	89
05:30 PM	54	1	2	57	8	2	4	14	2	24	0	0	26	97
05:45 PM	50	0	2	52	1	1	4	6	1	32	0	0	33	91
Total	214	2	6	222	15	11	12	38	10	119	0	0	129	389
06:00 PM	43	0	2	45	4	4	0	8	5	23	0	0	28	81
06:15 PM	40	0	0	40	4	2	0	6	2	27	0	0	29	75
Grand Total	497	5	13	515	51	29	18	98	36	338	0	0	374	987
Apprch %	96.5	1	2.5		52	29.6	18.4		9.6	90.4	0	0		
Total %	50.4	0.5	1.3	52.2	5.2	2.9	1.8	9.9	3.6	34.2	0	0	37.9	

	N Fillmore Southbound			N Service Rd Westbound			N Fillmore Northbound				
Start Time	Thru	Left	App. Total	Right	Left	App. Total	Right	Thru	Left	App. Total	Int. Total
Peak Hour Analysis From 03:30 PM to 06:15 PM - Peak 1 of 1											
Peak Hour for Entire Intersection Begins at 05:00 PM											
05:00 PM	**65**	**1**	**66**	5	**5**	**10**	**4**	**32**	0	**36**	**112**
05:15 PM	45	0	45	1	3	4	3	31	0	34	83
05:30 PM	54	1	55	**8**	2	10	2	24	0	26	91
05:45 PM	50	0	50	1	1	2	1	32	0	33	85
Total Volume	214	2	216	15	11	26	10	119	0	129	371
% App. Total	99.1	0.9		57.7	42.3		7.8	92.2	0		
PHF	.823	.500	.818	.469	.550	.650	.625	.930	.000	.896	.828

Peggy Malone & Associates, Inc.
(888) 247-8602

File Name : 11-Fillmore St and Arlington Blvd Svc Rd North PM
Site Code :
Start Date : 5/29/2019
Page No : 1

Groups Printed- Truck

	N Fillmore Southbound				N Service Rd Westbound				N Fillmore Northbound					
Start Time	Thru	Left	Peds	App. Total	Right	Left	Peds	App. Total	Right	Thru	Left	Peds	App. Total	Int. Total
03:30 PM	2	0	0	2	0	0	0	0	0	0	0	0	0	2
03:45 PM	0	0	0	0	0	0	0	0	0	0	0	0	0	0
Total	2	0	0	2	0	0	0	0	0	0	0	0	0	2
04:00 PM	2	0	0	2	0	0	0	0	0	1	0	0	1	3
04:15 PM	5	0	0	5	0	0	0	0	0	0	0	0	0	5
04:30 PM	3	0	0	3	0	0	0	0	0	2	0	0	2	5
04:45 PM	1	0	0	1	0	0	0	0	0	0	0	0	0	1
Total	11	0	0	11	0	0	0	0	0	3	0	0	3	14
05:00 PM	0	0	0	0	0	0	0	0	0	0	0	0	0	0
05:15 PM	1	0	0	1	0	0	0	0	0	0	0	0	0	1
05:30 PM	1	0	0	1	0	0	0	0	0	0	0	0	0	1
05:45 PM	0	0	0	0	0	0	0	0	0	0	0	0	0	0
Total	2	0	0	2	0	0	0	0	0	0	0	0	0	2
06:00 PM	0	0	0	0	0	0	0	0	0	0	0	0	0	0
06:15 PM	0	0	0	0	0	0	0	0	0	0	0	0	0	0
Grand Total	15	0	0	15	0	0	0	0	0	3	0	0	3	18
Apprch %	100	0	0		0	0	0		0	100	0	0		
Total %	83.3	0	0	83.3	0	0	0	0	0	16.7	0	0	16.7	

	N Fillmore Southbound			N Service Rd Westbound			N Fillmore Northbound				
Start Time	Thru	Left	App. Total	Right	Left	App. Total	Right	Thru	Left	App. Total	Int. Total
Peak Hour Analysis From 03:30 PM to 06:15 PM - Peak 1 of 1											
Peak Hour for Entire Intersection Begins at 04:00 PM											
04:00 PM	2	0	2	0	0	0	0	1	0	1	3
04:15 PM	**5**	0	**5**	0	0	0	0	0	0	0	**5**
04:30 PM	3	0	3	0	0	0	0	**2**	0	**2**	5
04:45 PM	1	0	1	0	0	0	0	0	0	0	1
Total Volume	11	0	11	0	0	0	0	3	0	3	14
% App. Total	100	0		0	0		0	100	0		
PHF	.550	.000	.550	.000	.000	.000	.000	.375	.000	.375	.700

Peggy Malone & Associates, Inc.
(888) 247-8602

File Name : 11-Fillmore St and Arlington Blvd Svc Rd North PM
Site Code :
Start Date : 5/29/2019
Page No : 1

Groups Printed- Bicycles on Crosswalk

	N Fillmore Southbound				N Service Rd Westbound				N Fillmore Northbound					
Start Time	Thru	Left	Peds	App. Total	Right	Left	Peds	App. Total	Right	Thru	Left	Peds	App. Total	Int. Total
03:30 PM	0	0	0	0	0	0	0	0	0	0	0	0	0	0
03:45 PM	0	0	0	0	0	0	2	2	0	0	0	0	0	2
Total	0	0	0	0	0	0	2	2	0	0	0	0	0	2
04:00 PM	0	0	0	0	0	0	0	0	0	0	0	0	0	0
04:15 PM	0	0	0	0	0	0	0	0	0	0	0	0	0	0
04:30 PM	0	0	0	0	0	0	0	0	0	0	0	0	0	0
04:45 PM	0	0	0	0	0	0	0	0	0	0	0	0	0	0
Total	0	0	0	0	0	0	0	0	0	0	0	0	0	0
05:00 PM	0	0	0	0	0	0	0	0	0	0	0	0	0	0
05:15 PM	0	0	0	0	0	0	0	0	0	0	0	0	0	0
05:30 PM	0	0	0	0	0	0	0	0	0	0	0	0	0	0
05:45 PM	0	0	0	0	0	0	1	1	0	0	0	1	1	2
Total	0	0	0	0	0	0	1	1	0	0	0	1	1	2
06:00 PM	0	0	2	2	0	0	0	0	0	0	0	1	1	3
06:15 PM	0	0	0	0	0	0	0	0	0	0	0	1	1	1
Grand Total	0	0	2	2	0	0	3	3	0	0	0	3	3	8
Apprch %	0	0	100		0	0	100		0	0	0	100		
Total %	0	0	25	25	0	0	37.5	37.5	0	0	0	37.5	37.5	

	N Fillmore Southbound			N Service Rd Westbound			N Fillmore Northbound				
Start Time	Thru	Left	App. Total	Right	Left	App. Total	Right	Thru	Left	App. Total	Int. Total
Peak Hour Analysis From 03:30 PM to 06:15 PM - Peak 1 of 1											
Peak Hour for Entire Intersection Begins at 03:30 PM											
03:30 PM	0	0	0	0	0	0	0	0	0	0	0
03:45 PM	0	0	0	0	0	0	0	0	0	0	0
04:00 PM	0	0	0	0	0	0	0	0	0	0	0
04:15 PM	0	0	0	0	0	0	0	0	0	0	0
Total Volume	0	0	0	0	0	0	0	0	0	0	0
% App. Total	0	0		0	0		0	0	0		
PHF	.000	.000	.000	.000	.000	.000	.000	.000	.000	.000	.000

Peggy Malone & Associates, Inc.

(888) 247-8602

File Name : 11-Fillmore St and Arlington Blvd Svc Rd North PM
Site Code :
Start Date : 5/29/2019
Page No : 1

Groups Printed- Combined

	N Fillmore Southbound				N Service Rd Westbound				N Fillmore Northbound					
Start Time	Thru	Left	Peds	App. Total	Right	Left	Peds	App. Total	Right	Thru	Left	Peds	App. Total	Int. Total
03:30 PM	36	1	0	37	5	5	2	12	1	23	0	0	24	73
03:45 PM	26	2	0	28	4	4	3	11	4	32	0	0	36	75
Total	62	3	0	65	9	9	5	23	5	55	0	0	60	148
04:00 PM	39	0	1	40	3	1	1	5	3	33	0	0	36	81
04:15 PM	35	0	3	38	7	0	1	8	3	21	0	0	24	70
04:30 PM	31	0	0	31	5	2	1	8	0	36	0	0	36	75
04:45 PM	46	0	1	47	4	0	0	4	8	27	0	0	35	86
Total	151	0	5	156	19	3	3	25	14	117	0	0	131	312
05:00 PM	65	1	0	66	5	5	0	10	4	32	0	0	36	112
05:15 PM	46	0	2	48	1	3	4	8	3	31	0	0	34	90
05:30 PM	55	1	2	58	8	2	4	14	2	24	0	0	26	98
05:45 PM	50	0	2	52	1	1	5	7	1	32	0	1	34	93
Total	216	2	6	224	15	11	13	39	10	119	0	1	130	393
06:00 PM	43	0	4	47	4	4	0	8	5	23	0	1	29	84
06:15 PM	40	0	0	40	4	2	0	6	2	27	0	1	30	76
Grand Total	512	5	15	532	51	29	21	101	36	341	0	3	380	1013
Apprch %	96.2	0.9	2.8		50.5	28.7	20.8		9.5	89.7	0	0.8		
Total %	50.5	0.5	1.5	52.5	5	2.9	2.1	10	3.6	33.7	0	0.3	37.5	

	N Fillmore Southbound			N Service Rd Westbound			N Fillmore Northbound				
Start Time	Thru	Left	App. Total	Right	Left	App. Total	Right	Thru	Left	App. Total	Int. Total
Peak Hour Analysis From 03:30 PM to 06:15 PM - Peak 1 of 1											
Peak Hour for Entire Intersection Begins at 04:45 PM											
04:45 PM	46	0	46	4	0	4	**8**	27	0	35	85
05:00 PM	**65**	**1**	**66**	5	**5**	**10**	4	**32**	0	**36**	**112**
05:15 PM	46	0	46	1	3	4	3	31	0	34	84
05:30 PM	55	1	56	**8**	2	10	2	24	0	26	92
Total Volume	212	2	214	18	10	28	17	114	0	131	373
% App. Total	99.1	0.9		64.3	35.7		13	87	0		
PHF	.815	.500	.811	.563	.500	.700	.531	.891	.000	.910	.833

Peggy Malone & Associates, Inc.

(888) 247-8602

File Name : 12-Fillmore St and Arlington Blvd Svc Rd South AM
Site Code :
Start Date : 5/29/2019
Page No : 1

Groups Printed- Car

	S Fillmore Southbound					S Service Rd Westbound					S. Fillmore Northbound					S. Service Rd Eastbound					
Start Time	Right	Thru	Left	Peds	App. Total	Right	Thru	Left	Peds	App. Total	Right	Thru	Left	Peds	App. Total	Right	Thru	Left	Peds	App. Total	Int. Total
06:30 AM	1	15	1	0	17	1	0	1	0	2	1	69	0	0	70	1	0	0	1	2	91
06:45 AM	0	26	1	0	27	2	0	2	0	4	1	78	0	0	79	3	1	0	2	6	116
Total	1	41	2	0	44	3	0	3	0	6	2	147	0	0	149	4	1	0	3	8	207
07:00 AM	1	26	1	1	29	1	0	2	1	4	0	72	0	0	72	1	0	1	3	5	110
07:15 AM	0	30	0	0	30	1	0	1	1	3	1	86	0	0	87	1	0	0	0	1	121
07:30 AM	0	34	5	0	39	4	0	0	0	4	1	112	0	0	113	1	1	0	1	3	159
07:45 AM	0	26	3	0	29	4	1	2	0	7	0	97	0	1	98	1	2	1	1	5	139
Total	1	116	9	1	127	10	1	5	2	18	2	367	0	1	370	4	3	2	5	14	529
08:00 AM	2	36	2	1	41	3	1	1	10	15	0	87	0	0	87	0	0	1	0	1	144
08:15 AM	0	49	2	0	51	3	0	0	8	11	0	91	0	0	91	1	2	3	0	6	159
08:30 AM	1	40	1	2	44	3	0	1	2	6	0	79	0	1	80	0	0	1	1	2	132
08:45 AM	0	45	5	0	50	0	1	1	2	4	0	113	0	0	113	0	0	2	0	2	169
Total	3	170	10	3	186	9	2	3	22	36	0	370	0	1	371	1	2	7	1	11	604
09:00 AM	0	39	2	0	41	4	0	1	0	5	1	90	0	0	91	0	0	0	1	1	138
09:15 AM	2	34	4	0	40	1	0	1	1	3	0	87	0	0	87	0	0	1	0	1	131
Grand Total	7	400	27	4	438	27	3	13	25	68	5	1061	0	2	1068	9	6	10	10	35	1609
Apprch %	1.6	91.3	6.2	0.9		39.7	4.4	19.1	36.8		0.5	99.3	0	0.2		25.7	17.1	28.6	28.6		
Total %	0.4	24.9	1.7	0.2	27.2	1.7	0.2	0.8	1.6	4.2	0.3	65.9	0	0.1	66.4	0.6	0.4	0.6	0.6	2.2	

	S Fillmore Southbound				S Service Rd Westbound				S. Fillmore Northbound				S. Service Rd Eastbound				
Start Time	Right	Thru	Left	App. Total	Right	Thru	Left	App. Total	Right	Thru	Left	App. Total	Right	Thru	Left	App. Total	Int. Total
Peak Hour Analysis From 06:30 AM to 09:15 AM - Peak 1 of 1																	
Peak Hour for Entire Intersection Begins at 08:15 AM																	
08:15 AM	0	**49**	2	**51**	3	0	0	3	0	91	0	91	**1**	**2**	**3**	**6**	151
08:30 AM	**1**	40	1	42	3	0	**1**	4	0	79	0	79	0	0	1	1	126
08:45 AM	0	45	**5**	50	0	**1**	1	2	0	**113**	0	**113**	0	0	2	2	**167**
09:00 AM	0	39	2	41	**4**	0	1	**5**	**1**	90	0	91	0	0	0	0	137
Total Volume	1	173	10	184	10	1	3	14	1	373	0	374	1	2	6	9	581
% App. Total	0.5	94	5.4		71.4	7.1	21.4		0.3	99.7	0		11.1	22.2	66.7		
PHF	.250	.883	.500	.902	.625	.250	.750	.700	.250	.825	.000	.827	.250	.250	.500	.375	.870

Peggy Malone & Associates, Inc.

(888) 247-8602

File Name : 12-Fillmore St and Arlington Blvd Svc Rd South AM
Site Code :
Start Date : 5/29/2019
Page No : 1

Groups Printed- Truck

	S Fillmore Southbound					S Service Rd Westbound					S. Fillmore Northbound					S. Service Rd Eastbound					
Start Time	Right	Thru	Left	Peds	App. Total	Right	Thru	Left	Peds	App. Total	Right	Thru	Left	Peds	App. Total	Right	Thru	Left	Peds	App. Total	Int. Total
06:30 AM	0	1	0	0	1	0	0	0	0	0	0	2	0	0	2	0	0	0	0	0	3
06:45 AM	0	0	0	0	0	0	0	0	0	0	0	4	0	0	4	0	0	0	0	0	4
Total	0	1	0	0	1	0	0	0	0	0	0	6	0	0	6	0	0	0	0	0	7
07:00 AM	0	0	0	0	0	0	0	0	0	0	0	2	0	0	2	0	0	0	0	0	2
07:15 AM	0	2	0	0	2	0	0	0	0	0	0	4	0	0	4	0	0	0	0	0	6
07:30 AM	0	2	0	0	2	0	0	0	0	0	0	3	0	0	3	0	0	0	0	0	5
07:45 AM	0	1	1	0	2	0	0	0	0	0	1	1	0	0	2	1	0	0	0	1	5
Total	0	5	1	0	6	0	0	0	0	0	1	10	0	0	11	1	0	0	0	1	18
08:00 AM	1	3	0	0	4	0	0	0	0	0	0	2	0	0	2	0	0	2	0	2	8
08:15 AM	0	0	0	0	0	0	0	0	0	0	0	4	0	0	4	0	0	0	0	0	4
08:30 AM	0	1	0	0	1	0	0	0	0	0	0	7	0	0	7	0	0	0	0	0	8
08:45 AM	0	2	0	0	2	0	0	0	0	0	0	3	0	0	3	0	0	0	0	0	5
Total	1	6	0	0	7	0	0	0	0	0	0	16	0	0	16	0	0	2	0	2	25
09:00 AM	0	3	0	0	3	1	0	0	0	1	0	2	0	0	2	0	0	0	0	0	6
09:15 AM	0	0	0	0	0	0	0	0	0	0	0	2	0	0	2	0	0	0	0	0	2
Grand Total	1	15	1	0	17	1	0	0	0	1	1	36	0	0	37	1	0	2	0	3	58
Apprch %	5.9	88.2	5.9	0		100	0	0	0		2.7	97.3	0	0		33.3	0	66.7	0		
Total %	1.7	25.9	1.7	0	29.3	1.7	0	0	0	1.7	1.7	62.1	0	0	63.8	1.7	0	3.4	0	5.2	

	S Fillmore Southbound				S Service Rd Westbound				S. Fillmore Northbound				S. Service Rd Eastbound				
Start Time	Right	Thru	Left	App. Total	Right	Thru	Left	App. Total	Right	Thru	Left	App. Total	Right	Thru	Left	App. Total	Int. Total
Peak Hour Analysis From 06:30 AM to 09:15 AM - Peak 1 of 1																	
Peak Hour for Entire Intersection Begins at 07:45 AM																	
07:45 AM	0	1	**1**	2	0	0	0	0	**1**	1	0	2	**1**	0	0	1	5
08:00 AM	**1**	**3**	0	**4**	0	0	0	0	0	2	0	2	0	0	**2**	**2**	**8**
08:15 AM	0	0	0	0	0	0	0	0	0	4	0	4	0	0	0	0	4
08:30 AM	0	1	0	1	0	0	0	0	0	**7**	0	**7**	0	0	0	0	8
Total Volume	1	5	1	7	0	0	0	0	1	14	0	15	1	0	2	3	25
% App. Total	14.3	71.4	14.3		0	0	0		6.7	93.3	0		33.3	0	66.7		
PHF	.250	.417	.250	.438	.000	.000	.000	.000	.250	.500	.000	.536	.250	.000	.250	.375	.781

Peggy Malone & Associates, Inc.

(888) 247-8602

File Name : 12-Fillmore St and Arlington Blvd Svc Rd South AM
Site Code :
Start Date : 5/29/2019
Page No : 1

Groups Printed- Bicycles on Crosswalk

	S Fillmore Southbound					S Service Rd Westbound					S. Fillmore Northbound					S. Service Rd Eastbound					
Start Time	Right	Thru	Left	Peds	App. Total	Right	Thru	Left	Peds	App. Total	Right	Thru	Left	Peds	App. Total	Right	Thru	Left	Peds	App. Total	Int. Total
06:30 AM	0	0	0	0	0	0	0	0	0	0	0	0	0	0	0	0	0	0	1	1	1
06:45 AM	0	0	0	0	0	0	0	0	0	0	0	0	0	0	0	0	0	0	0	0	0
Total	0	0	0	0	0	0	0	0	0	0	0	0	0	0	0	0	0	0	1	1	1
07:00 AM	0	0	0	0	0	0	0	0	0	0	0	0	0	0	0	0	0	0	0	0	0
07:15 AM	0	0	0	1	1	0	0	0	1	1	0	0	0	0	0	0	0	0	1	1	3
07:30 AM	0	0	0	0	0	0	0	0	1	1	0	0	0	0	0	0	0	0	1	1	2
07:45 AM	0	0	0	0	0	0	0	0	2	2	0	0	0	0	0	0	0	0	0	0	2
Total	0	0	0	1	1	0	0	0	4	4	0	0	0	0	0	0	0	0	2	2	7
08:00 AM	0	0	0	1	1	0	0	0	0	0	0	0	0	0	0	0	0	0	2	2	3
08:15 AM	0	0	0	0	0	0	0	0	1	1	0	0	0	0	0	0	0	0	0	0	1
08:30 AM	0	0	0	0	0	0	0	0	2	2	0	0	0	0	0	0	0	0	0	0	2
08:45 AM	0	0	0	0	0	0	0	0	0	0	0	0	0	0	0	0	0	0	0	0	0
Total	0	0	0	1	1	0	0	0	3	3	0	0	0	0	0	0	0	0	2	2	6
09:00 AM	0	0	0	1	1	0	0	0	0	0	0	0	0	0	0	0	0	0	0	0	1
09:15 AM	0	0	0	0	0	0	0	0	0	0	0	0	0	0	0	0	0	0	0	0	0
Grand Total	0	0	0	3	3	0	0	0	7	7	0	0	0	0	0	0	0	0	5	5	15
Apprch %	0	0	0	100		0	0	0	100		0	0	0	0		0	0	0	100		
Total %	0	0	0	20	20	0	0	0	46.7	46.7	0	0	0	0	0	0	0	0	33.3	33.3	

	S Fillmore Southbound				S Service Rd Westbound				S. Fillmore Northbound				S. Service Rd Eastbound				
Start Time	Right	Thru	Left	App. Total	Right	Thru	Left	App. Total	Right	Thru	Left	App. Total	Right	Thru	Left	App. Total	Int. Total
Peak Hour Analysis From 06:30 AM to 09:15 AM - Peak 1 of 1																	
Peak Hour for Entire Intersection Begins at 06:30 AM																	
06:30 AM	0	0	0	0	0	0	0	0	0	0	0	0	0	0	0	0	0
06:45 AM	0	0	0	0	0	0	0	0	0	0	0	0	0	0	0	0	0
07:00 AM	0	0	0	0	0	0	0	0	0	0	0	0	0	0	0	0	0
07:15 AM	0	0	0	0	0	0	0	0	0	0	0	0	0	0	0	0	0
Total Volume	0	0	0	0	0	0	0	0	0	0	0	0	0	0	0	0	0
% App. Total	0	0	0		0	0	0		0	0	0		0	0	0		
PHF	.000	.000	.000	.000	.000	.000	.000	.000	.000	.000	.000	.000	.000	.000	.000	.000	.000

Peggy Malone & Associates, Inc.

(888) 247-8602

File Name : 12-Fillmore St and Arlington Blvd Svc Rd South AM
Site Code :
Start Date : 5/29/2019
Page No : 1

Groups Printed- Combined

	S Fillmore Southbound					S Service Rd Westbound					S. Fillmore Northbound					S. Service Rd Eastbound					
Start Time	Right	Thru	Left	Peds	App. Total	Right	Thru	Left	Peds	App. Total	Right	Thru	Left	Peds	App. Total	Right	Thru	Left	Peds	App. Total	Int. Total
06:30 AM	1	16	1	0	18	1	0	1	0	2	1	71	0	0	72	1	0	0	2	3	95
06:45 AM	0	26	1	0	27	2	0	2	0	4	1	82	0	0	83	3	1	0	2	6	120
Total	1	42	2	0	45	3	0	3	0	6	2	153	0	0	155	4	1	0	4	9	215
07:00 AM	1	26	1	1	29	1	0	2	1	4	0	74	0	0	74	1	0	1	3	5	112
07:15 AM	0	32	0	1	33	1	0	1	2	4	1	90	0	0	91	1	0	0	1	2	130
07:30 AM	0	36	5	0	41	4	0	0	1	5	1	115	0	0	116	1	1	0	2	4	166
07:45 AM	0	27	4	0	31	4	1	2	2	9	1	98	0	1	100	2	2	1	1	6	146
Total	1	121	10	2	134	10	1	5	6	22	3	377	0	1	381	5	3	2	7	17	554
08:00 AM	3	39	2	2	46	3	1	1	10	15	0	89	0	0	89	0	0	3	2	5	155
08:15 AM	0	49	2	0	51	3	0	0	9	12	0	95	0	0	95	1	2	3	0	6	164
08:30 AM	1	41	1	2	45	3	0	1	4	8	0	86	0	1	87	0	0	1	1	2	142
08:45 AM	0	47	5	0	52	0	1	1	2	4	0	116	0	0	116	0	0	2	0	2	174
Total	4	176	10	4	194	9	2	3	25	39	0	386	0	1	387	1	2	9	3	15	635
09:00 AM	0	42	2	1	45	5	0	1	0	6	1	92	0	0	93	0	0	0	1	1	145
09:15 AM	2	34	4	0	40	1	0	1	1	3	0	89	0	0	89	0	0	1	0	1	133
Grand Total	8	415	28	7	458	28	3	13	32	76	6	1097	0	2	1105	10	6	12	15	43	1682
Apprch %	1.7	90.6	6.1	1.5		36.8	3.9	17.1	42.1		0.5	99.3	0	0.2		23.3	14	27.9	34.9		
Total %	0.5	24.7	1.7	0.4	27.2	1.7	0.2	0.8	1.9	4.5	0.4	65.2	0	0.1	65.7	0.6	0.4	0.7	0.9	2.6	

	S Fillmore Southbound				S Service Rd Westbound				S. Fillmore Northbound				S. Service Rd Eastbound				
Start Time	Right	Thru	Left	App. Total	Right	Thru	Left	App. Total	Right	Thru	Left	App. Total	Right	Thru	Left	App. Total	Int. Total
Peak Hour Analysis From 06:30 AM to 09:15 AM - Peak 1 of 1																	
Peak Hour for Entire Intersection Begins at 08:15 AM																	
08:15 AM	0	**49**	2	51	3	0	0	3	0	95	0	95	**1**	**2**	**3**	**6**	155
08:30 AM	**1**	41	1	43	3	0	**1**	4	0	86	0	86	0	0	1	1	134
08:45 AM	0	47	**5**	**52**	0	**1**	1	2	0	**116**	0	**116**	0	0	2	2	**172**
09:00 AM	0	42	2	44	**5**	0	1	**6**	**1**	92	0	93	0	0	0	0	143
Total Volume	1	179	10	190	11	1	3	15	1	389	0	390	1	2	6	9	604
% App. Total	0.5	94.2	5.3		73.3	6.7	20		0.3	99.7	0		11.1	22.2	66.7		
PHF	.250	.913	.500	.913	.550	.250	.750	.625	.250	.838	.000	.841	.250	.250	.500	.375	.878

Peggy Malone & Associates, Inc.

(888) 247-8602

File Name : 12-Fillmore St and Arlington Blvd Svc Rd South PM
Site Code :
Start Date : 5/29/2019
Page No : 1

Groups Printed- Car

	S Fillmore Southbound					S Service Rd Westbound					S. Fillmore Northbound					S. Service Rd Eastbound					
Start Time	Right	Thru	Left	Peds	App. Total	Right	Thru	Left	Peds	App. Total	Right	Thru	Left	Peds	App. Total	Right	Thru	Left	Peds	App. Total	Int. Total
03:30 PM	1	109	1	0	111	3	0	1	0	4	0	78	0	0	78	4	0	0	0	4	197
03:45 PM	2	88	1	0	91	4	0	1	0	5	0	66	0	0	66	1	0	0	0	1	163
Total	3	197	2	0	202	7	0	2	0	9	0	144	0	0	144	5	0	0	0	5	360
04:00 PM	4	105	4	0	113	2	0	0	0	2	1	98	0	0	99	1	1	0	0	2	216
04:15 PM	1	97	3	0	101	3	0	2	0	5	3	81	0	0	84	0	0	0	0	0	190
04:30 PM	1	96	0	0	97	5	1	1	1	8	1	91	0	0	92	0	1	2	2	5	202
04:45 PM	0	115	3	1	119	10	0	3	1	14	0	75	0	0	75	4	0	1	0	5	213
Total	6	413	10	1	430	20	1	6	2	29	5	345	0	0	350	5	2	3	2	12	821
05:00 PM	3	122	0	0	125	5	0	1	0	6	2	94	0	0	96	1	1	0	0	2	229
05:15 PM	1	131	5	0	137	2	1	0	1	4	2	85	0	0	87	0	2	1	0	3	231
05:30 PM	1	128	4	0	133	4	0	0	6	10	1	96	0	0	97	5	0	0	0	5	245
05:45 PM	2	135	3	0	140	13	1	2	4	20	3	86	0	1	90	1	4	1	0	6	256
Total	7	516	12	0	535	24	2	3	11	40	8	361	0	1	370	7	7	2	0	16	961
06:00 PM	0	126	2	0	128	3	0	1	1	5	0	77	0	1	78	3	1	0	1	5	216
06:15 PM	1	130	5	0	136	3	0	0	1	4	2	83	0	0	85	0	0	0	0	0	225
Grand Total	17	1382	31	1	1431	57	3	12	15	87	15	1010	0	2	1027	20	10	5	3	38	2583
Apprch %	1.2	96.6	2.2	0.1		65.5	3.4	13.8	17.2		1.5	98.3	0	0.2		52.6	26.3	13.2	7.9		
Total %	0.7	53.5	1.2	0	55.4	2.2	0.1	0.5	0.6	3.4	0.6	39.1	0	0.1	39.8	0.8	0.4	0.2	0.1	1.5	

	S Fillmore Southbound				S Service Rd Westbound				S. Fillmore Northbound				S. Service Rd Eastbound				
Start Time	Right	Thru	Left	App. Total	Right	Thru	Left	App. Total	Right	Thru	Left	App. Total	Right	Thru	Left	App. Total	Int. Total
Peak Hour Analysis From 03:30 PM to 06:15 PM - Peak 1 of 1																	
Peak Hour for Entire Intersection Begins at 05:00 PM																	
05:00 PM	**3**	122	0	125	5	0	1	6	2	94	0	96	1	1	0	2	229
05:15 PM	1	131	**5**	137	2	**1**	0	3	2	85	0	87	0	2	**1**	3	230
05:30 PM	1	128	4	133	4	0	0	4	1	**96**	0	**97**	**5**	0	0	5	239
05:45 PM	2	**135**	3	**140**	**13**	1	**2**	**16**	**3**	86	0	89	1	**4**	1	**6**	**251**
Total Volume	7	516	12	535	24	2	3	29	8	361	0	369	7	7	2	16	949
% App. Total	1.3	96.4	2.2		82.8	6.9	10.3		2.2	97.8	0		43.8	43.8	12.5		
PHF	.583	.956	.600	.955	.462	.500	.375	.453	.667	.940	.000	.951	.350	.438	.500	.667	.945

Peggy Malone & Associates, Inc.

(888) 247-8602

File Name : 12-Fillmore St and Arlington Blvd Svc Rd South PM
Site Code :
Start Date : 5/29/2019
Page No : 1

Groups Printed- Truck

	S Fillmore Southbound					S Service Rd Westbound					S. Fillmore Northbound					S. Service Rd Eastbound					
Start Time	Right	Thru	Left	Peds	App. Total	Right	Thru	Left	Peds	App. Total	Right	Thru	Left	Peds	App. Total	Right	Thru	Left	Peds	App. Total	Int. Total
03:30 PM	0	2	0	0	2	0	0	0	0	0	0	1	0	0	1	0	0	0	0	0	3
03:45 PM	0	0	0	0	0	0	0	0	0	0	0	2	0	0	2	0	0	0	0	0	2
Total	0	2	0	0	2	0	0	0	0	0	0	3	0	0	3	0	0	0	0	0	5
04:00 PM	0	3	0	0	3	0	0	0	0	0	0	1	0	0	1	0	0	0	0	0	4
04:15 PM	0	8	0	0	8	0	0	0	0	0	0	1	0	0	1	0	0	0	0	0	9
04:30 PM	0	5	0	0	5	0	0	0	0	0	0	2	0	0	2	0	0	0	0	0	7
04:45 PM	0	3	0	0	3	0	0	0	0	0	0	0	0	0	0	0	0	0	0	0	3
Total	0	19	0	0	19	0	0	0	0	0	0	4	0	0	4	0	0	0	0	0	23
05:00 PM	0	2	0	0	2	0	0	0	0	0	0	0	0	0	0	0	0	0	0	0	2
05:15 PM	0	1	0	0	1	0	0	0	0	0	0	0	0	0	0	0	0	0	0	0	1
05:30 PM	0	1	0	0	1	0	0	0	0	0	0	0	0	0	0	0	0	0	0	0	1
05:45 PM	0	2	0	0	2	0	0	0	0	0	0	0	0	0	0	0	0	0	0	0	2
Total	0	6	0	0	6	0	0	0	0	0	0	0	0	0	0	0	0	0	0	0	6
06:00 PM	0	4	0	0	4	0	0	0	0	0	0	1	0	0	1	0	0	0	0	0	5
06:15 PM	0	0	0	0	0	0	0	0	0	0	0	0	0	0	0	0	0	0	0	0	0
Grand Total	0	31	0	0	31	0	0	0	0	0	0	8	0	0	8	0	0	0	0	0	39
Apprch %	0	100	0	0		0	0	0	0		0	100	0	0		0	0	0	0		
Total %	0	79.5	0	0	79.5	0	0	0	0	0	0	20.5	0	0	20.5	0	0	0	0	0	

	S Fillmore Southbound				S Service Rd Westbound				S. Fillmore Northbound				S. Service Rd Eastbound				
Start Time	Right	Thru	Left	App. Total	Right	Thru	Left	App. Total	Right	Thru	Left	App. Total	Right	Thru	Left	App. Total	Int. Total
Peak Hour Analysis From 03:30 PM to 06:15 PM - Peak 1 of 1																	
Peak Hour for Entire Intersection Begins at 04:00 PM																	
04:00 PM	0	3	0	3	0	0	0	0	0	1	0	1	0	0	0	0	4
04:15 PM	0	**8**	0	**8**	0	0	0	0	0	1	0	1	0	0	0	0	**9**
04:30 PM	0	5	0	5	0	0	0	0	0	**2**	0	**2**	0	0	0	0	7
04:45 PM	0	3	0	3	0	0	0	0	0	0	0	0	0	0	0	0	3
Total Volume	0	19	0	19	0	0	0	0	0	4	0	4	0	0	0	0	23
% App. Total	0	100	0		0	0	0		0	100	0		0	0	0		
PHF	.000	.594	.000	.594	.000	.000	.000	.000	.000	.500	.000	.500	.000	.000	.000	.000	.639

Peggy Malone & Associates, Inc.

(888) 247-8602

File Name : 12-Fillmore St and Arlington Blvd Svc Rd South PM
Site Code :
Start Date : 5/29/2019
Page No : 1

Groups Printed- Bicycles on Crosswalk

	S Fillmore Southbound					S Service Rd Westbound					S. Fillmore Northbound					S. Service Rd Eastbound					
Start Time	Right	Thru	Left	Peds	App. Total	Right	Thru	Left	Peds	App. Total	Right	Thru	Left	Peds	App. Total	Right	Thru	Left	Peds	App. Total	Int. Total
03:30 PM	0	0	0	0	0	0	0	0	0	0	0	0	0	0	0	0	0	0	0	0	0
03:45 PM	0	0	0	0	0	0	0	0	3	3	0	0	0	0	0	0	0	0	0	0	3
Total	0	0	0	0	0	0	0	0	3	3	0	0	0	0	0	0	0	0	0	0	3
04:00 PM	0	0	0	0	0	0	0	0	0	0	0	0	0	0	0	0	0	0	0	0	0
04:15 PM	0	0	0	0	0	0	0	0	0	0	0	0	0	0	0	0	0	0	0	0	0
04:30 PM	0	0	0	0	0	0	0	0	0	0	0	0	0	0	0	0	0	0	2	2	2
04:45 PM	0	0	0	0	0	0	0	0	1	1	0	0	0	0	0	0	0	0	0	0	1
Total	0	0	0	0	0	0	0	0	1	1	0	0	0	0	0	0	0	0	2	2	3
05:00 PM	0	0	0	0	0	0	0	0	0	0	0	0	0	0	0	0	0	0	1	1	1
05:15 PM	0	0	0	0	0	0	0	0	0	0	0	0	0	0	0	0	0	0	0	0	0
05:30 PM	0	0	0	0	0	0	0	0	0	0	0	0	0	0	0	0	0	0	0	0	0
05:45 PM	0	0	0	0	0	0	0	0	0	0	0	0	0	0	0	0	0	0	0	0	0
Total	0	0	0	0	0	0	0	0	0	0	0	0	0	0	0	0	0	0	1	1	1
06:00 PM	0	0	0	0	0	0	0	0	1	1	0	0	0	0	0	0	0	0	0	0	1
06:15 PM	0	0	0	0	0	0	0	0	2	2	0	0	0	0	0	0	0	0	0	0	2
Grand Total	0	0	0	0	0	0	0	0	7	7	0	0	0	0	0	0	0	0	3	3	10
Apprch %	0	0	0	0		0	0	0	100		0	0	0	0		0	0	0	100		
Total %	0	0	0	0	0	0	0	0	70	70	0	0	0	0	0	0	0	0	30	30	

	S Fillmore Southbound				S Service Rd Westbound				S. Fillmore Northbound				S. Service Rd Eastbound				
Start Time	Right	Thru	Left	App. Total	Right	Thru	Left	App. Total	Right	Thru	Left	App. Total	Right	Thru	Left	App. Total	Int. Total
Peak Hour Analysis From 03:30 PM to 06:15 PM - Peak 1 of 1																	
Peak Hour for Entire Intersection Begins at 03:30 PM																	
03:30 PM	0	0	0	0	0	0	0	0	0	0	0	0	0	0	0	0	0
03:45 PM	0	0	0	0	0	0	0	0	0	0	0	0	0	0	0	0	0
04:00 PM	0	0	0	0	0	0	0	0	0	0	0	0	0	0	0	0	0
04:15 PM	0	0	0	0	0	0	0	0	0	0	0	0	0	0	0	0	0
Total Volume	0	0	0	0	0	0	0	0	0	0	0	0	0	0	0	0	0
% App. Total	0	0	0		0	0	0		0	0	0		0	0	0		
PHF	.000	.000	.000	.000	.000	.000	.000	.000	.000	.000	.000	.000	.000	.000	.000	.000	.000

Peggy Malone & Associates, Inc.

(888) 247-8602

File Name : 12-Fillmore St and Arlington Blvd Svc Rd South PM
Site Code :
Start Date : 5/29/2019
Page No : 1

Groups Printed- Combined

	S Fillmore Southbound					S Service Rd Westbound					S. Fillmore Northbound					S. Service Rd Eastbound					
Start Time	Right	Thru	Left	Peds	App. Total	Right	Thru	Left	Peds	App. Total	Right	Thru	Left	Peds	App. Total	Right	Thru	Left	Peds	App. Total	Int. Total
03:30 PM	1	111	1	0	113	3	0	1	0	4	0	79	0	0	79	4	0	0	0	4	200
03:45 PM	2	88	1	0	91	4	0	1	3	8	0	68	0	0	68	1	0	0	0	1	168
Total	3	199	2	0	204	7	0	2	3	12	0	147	0	0	147	5	0	0	0	5	368
04:00 PM	4	108	4	0	116	2	0	0	0	2	1	99	0	0	100	1	1	0	0	2	220
04:15 PM	1	105	3	0	109	3	0	2	0	5	3	82	0	0	85	0	0	0	0	0	199
04:30 PM	1	101	0	0	102	5	1	1	1	8	1	93	0	0	94	0	1	2	4	7	211
04:45 PM	0	118	3	1	122	10	0	3	2	15	0	75	0	0	75	4	0	1	0	5	217
Total	6	432	10	1	449	20	1	6	3	30	5	349	0	0	354	5	2	3	4	14	847
05:00 PM	3	124	0	0	127	5	0	1	0	6	2	94	0	0	96	1	1	0	1	3	232
05:15 PM	1	132	5	0	138	2	1	0	1	4	2	85	0	0	87	0	2	1	0	3	232
05:30 PM	1	129	4	0	134	4	0	0	6	10	1	96	0	0	97	5	0	0	0	5	246
05:45 PM	2	137	3	0	142	13	1	2	4	20	3	86	0	1	90	1	4	1	0	6	258
Total	7	522	12	0	541	24	2	3	11	40	8	361	0	1	370	7	7	2	1	17	968
06:00 PM	0	130	2	0	132	3	0	1	2	6	0	78	0	1	79	3	1	0	1	5	222
06:15 PM	1	130	5	0	136	3	0	0	3	6	2	83	0	0	85	0	0	0	0	0	227
Grand Total	17	1413	31	1	1462	57	3	12	22	94	15	1018	0	2	1035	20	10	5	6	41	2632
Apprch %	1.2	96.6	2.1	0.1		60.6	3.2	12.8	23.4		1.4	98.4	0	0.2		48.8	24.4	12.2	14.6		
Total %	0.6	53.7	1.2	0	55.5	2.2	0.1	0.5	0.8	3.6	0.6	38.7	0	0.1	39.3	0.8	0.4	0.2	0.2	1.6	

	S Fillmore Southbound				S Service Rd Westbound				S. Fillmore Northbound				S. Service Rd Eastbound				
Start Time	Right	Thru	Left	App. Total	Right	Thru	Left	App. Total	Right	Thru	Left	App. Total	Right	Thru	Left	App. Total	Int. Total
Peak Hour Analysis From 03:30 PM to 06:15 PM - Peak 1 of 1																	
Peak Hour for Entire Intersection Begins at 05:00 PM																	
05:00 PM	**3**	124	0	127	5	0	1	6	2	94	0	96	1	1	0	2	231
05:15 PM	1	132	**5**	138	2	**1**	0	3	2	85	0	87	0	2	**1**	3	231
05:30 PM	1	129	4	134	4	0	0	4	1	**96**	0	**97**	**5**	0	0	5	240
05:45 PM	2	**137**	3	**142**	**13**	1	**2**	**16**	**3**	86	0	89	1	**4**	1	**6**	**253**
Total Volume	7	522	12	541	24	2	3	29	8	361	0	369	7	7	2	16	955
% App. Total	1.3	96.5	2.2		82.8	6.9	10.3		2.2	97.8	0		43.8	43.8	12.5		
PHF	.583	.953	.600	.952	.462	.500	.375	.453	.667	.940	.000	.951	.350	.438	.500	.667	.944

Appendix C – Traffic Volumes Forecasts Development

Whitman, Requardt & Associates, LLP
Engineers · Architects · Environmental Planners Est. 1915

MEMORANDUM

Date: January 15, 2020

To: Bobby Mangalath – VDOT NOVA District
From: WRA
Subject: Traffic Volume Forecasts Development

Work Order Number: 45877-003

Project: Arlington Boulevard (US Route 50) Corridor Improvement Study

Introduction: The Virginia Department of Transportation (VDOT) has initiated this STARS study to evaluate operational and safety conditions of Arlington Boulevard (US Route 50) from Route 120 (Glebe Road) to Route 6622 (Fillmore Street) and identify improvements that can be incorporated into the Six-Year Improvement Plan (SYIP). This study will propose alternatives and technical solutions to mitigate the safety issues and to improve traffic operations and alleviate congestion. The study area is depicted in **Figure 1** below.

The purpose of this memo is to document the development of the future horizon year (2030) peak hour traffic volumes to be used to document future No Build and Build conditions.

Figure 1: Study Area

9030 Stony Point Parkway, Suite 220 Richmond, Virginia 23235
www.wrallp.com · Phone: 804.272.8700 · Fax: 804.272.8897

Traffic Data Collection: Classified 6-hour turning movement counts were collected by Peggy Malone & Associates (PMA) on Wednesday, May 29, 2019 at the signalized Route 50 ramp intersections on Glebe Road, Route 50 and Irving Street and Fillmore Street, and unsignalized intersections of Route 50 and Old Glebe Road, Jackson Street, Hudson Street, Highland Street, Garfield Street, Fenwick Street, and the Route 50 north and south frontage roads at Fillmore Street. 48-hour classified tube counts were collected by PMA on Route 50 between Old Glebe Road and Jackson Street and between Highland Street and Garfield Street on May 29 - 30, 2019. Based on a review of collected traffic data, the AM peak hour for the Route 50 corridor is from 8:00 AM to 9:00 AM and the PM peak hour is from 5:00 PM to 6:00 PM.

Traffic Volume Balancing: Existing traffic volumes were balanced along Route 50 from the Glebe Road interchange to Fillmore Street. Traffic volumes on Glebe Road between the Route 50 ramp intersections as well as Fillmore Street between Route 50 and the frontage roads were also balanced. Existing AM and PM peak hour traffic volumes are included in **Attachment A**.

Future Traffic Volume Development: VDOT's Statewide Planning System (SPS) data and the most recently adopted MWCOG model (Version 2.3.75) were reviewed to identify annual growth rates for the study area. **Table 1** depicts the 2018 annual average daily traffic volumes (AADT) and daily projections and the resulting calculated compounded annual growth rates for each source. As shown, annual growth rates range from 0.4% along Route 50 to 2.2% along Fillmore Street according to VDOT's SPS. A review of year 2019 daily volumes from the MWCOG model revealed that traffic volumes along this section of Route 50 are significantly less than existing daily traffic volumes (21,160 per the MWCOG model versus weekday daily counts of approximately 67,000). Therefore, the SPS growth rates were used as the primary source for establishing recommended annual growth rates with one exception. Along Fillmore Street, the SPS calculated growth rate of 2.18% was adjusted to a nominal growth rate of 0.5% due to the lower growth rate forecasts by the MWCOG model and the lack of opportunity for development opportunities along the Fillmore Street corridor.

The recommended annual growth rates are summarized in **Table 1**. The growth rates were applied to the existing turning movements within the study area to develop future background traffic volumes for the 2030 horizon year. No additional factors were applied to the forecasted traffic volumes to account for anticipated development. Future traffic volumes were re-balanced as necessary between study intersections. Year 2030 AM and PM peak hour traffic volumes are included in **Attachment A**.

Table 1: Recommended Growth Rates

Facility	From	To	Statewide Planning System (SPS)			MWCOG Model			Recommended Growth Rate
			2018 ADT	2045 ADT	Annual Growth Rate	2019 ADT	2030 ADT	Annual Growth Rate	
Route 50 – Arlington Boulevard	Glebe Road	Fillmore Street	61,802	68,178	0.36%	21,160	22,475	0.22%	0.4%
Fillmore Street	North of Route 50	South of Route 50	9,206	16,496	2.18%	11,524	11,926	0.13%	0.5%
Glebe Road	Route 50	South of Route 50	31,180	35,979	0.53%	44,778	43,446	-0.11%	0.5%
Glebe Road	Route 50	North of Route 50	26,304	34,811	1.04%	41,990	37,610	-0.41%	1.0%

Attachment A

Existing 2019 Peak Hour Volumes
2030 Design Year Traffic Volumes

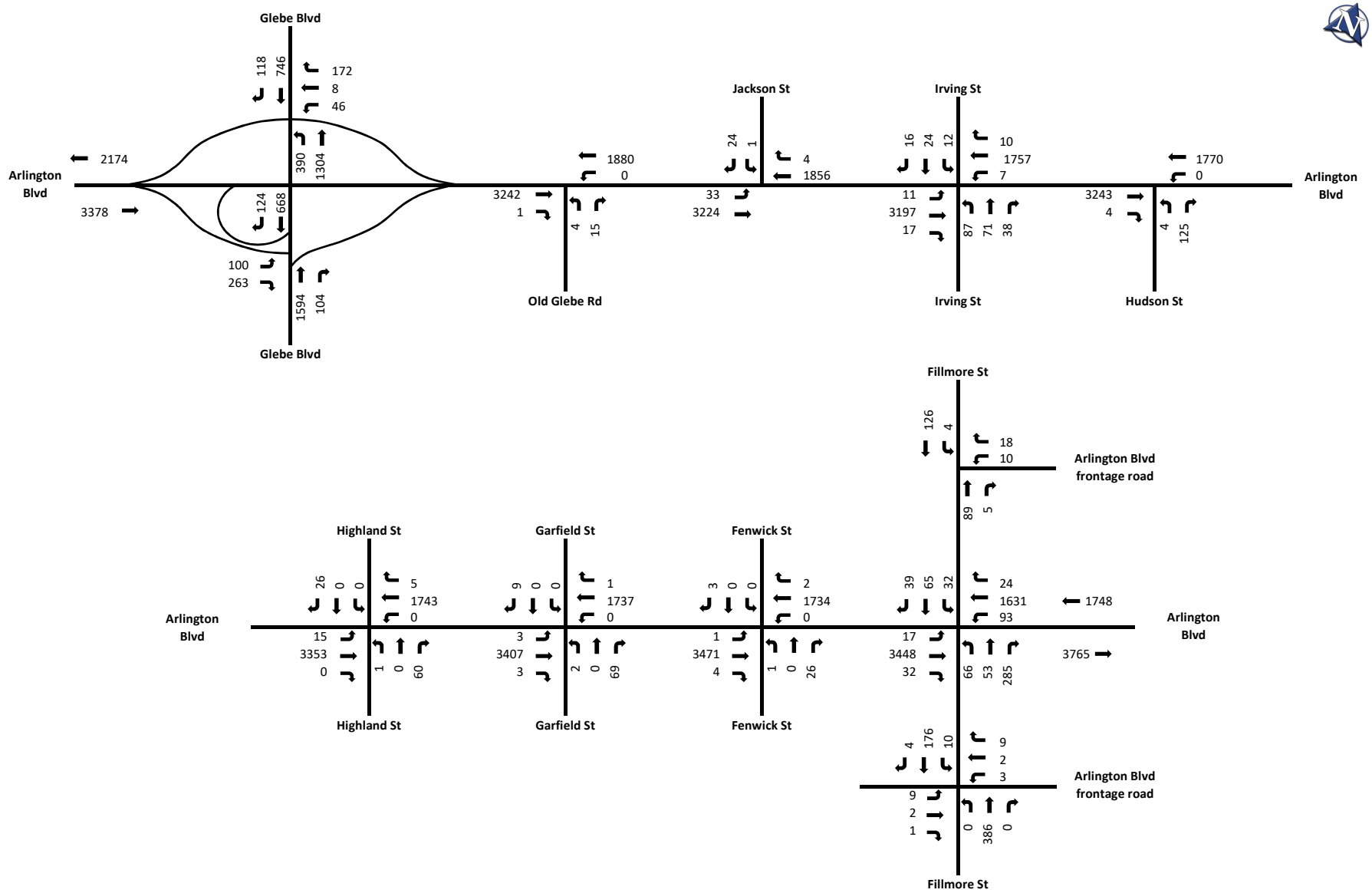

Not To Scale (NTS)

Weekday AM Peak Hour Volume

2019 Existing Traffic Volumes - Balanced

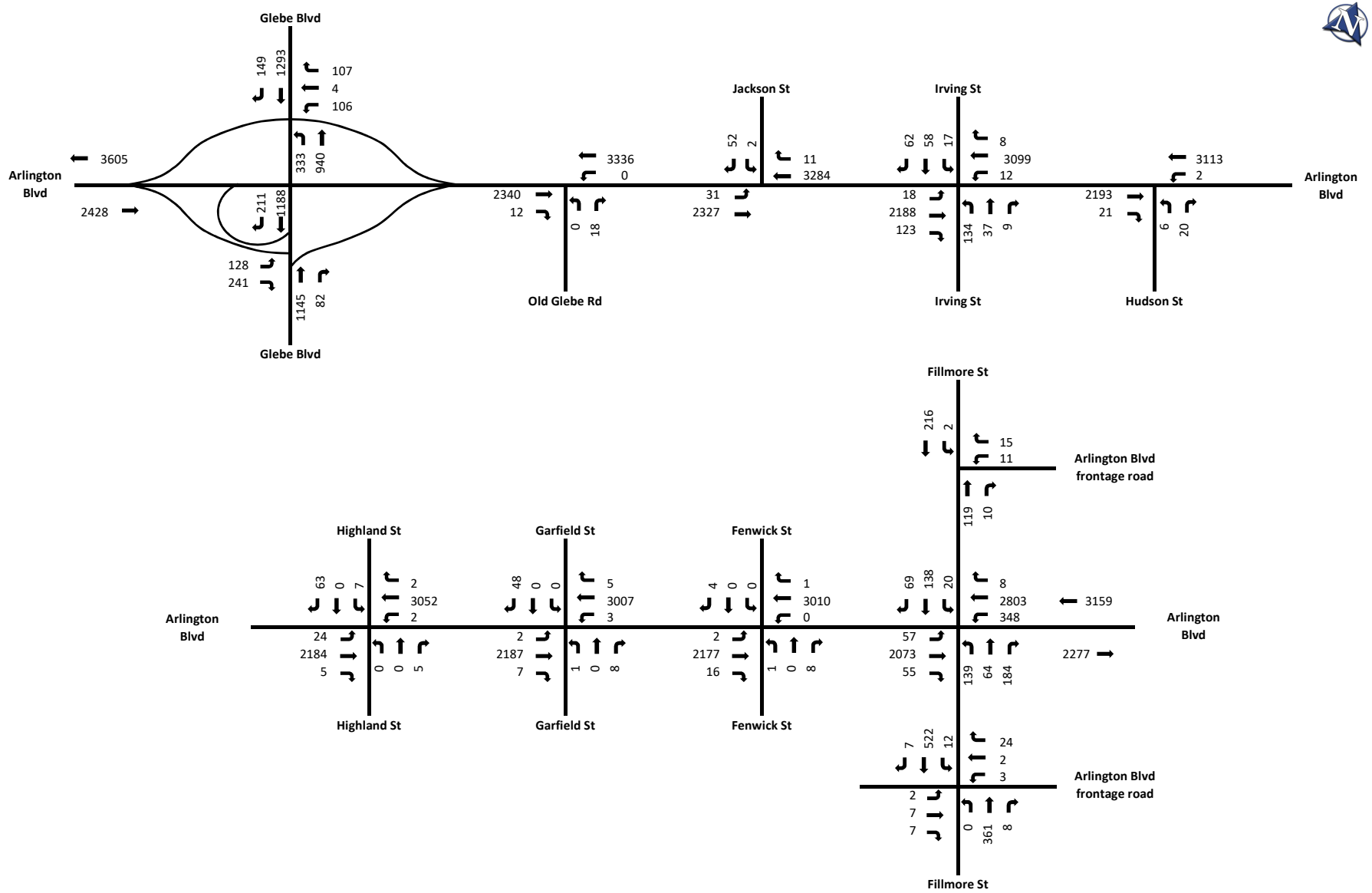

Not To Scale (NTS)

Weekday PM Peak Hour Volume

2019 Existing Traffic Volumes - Balanced

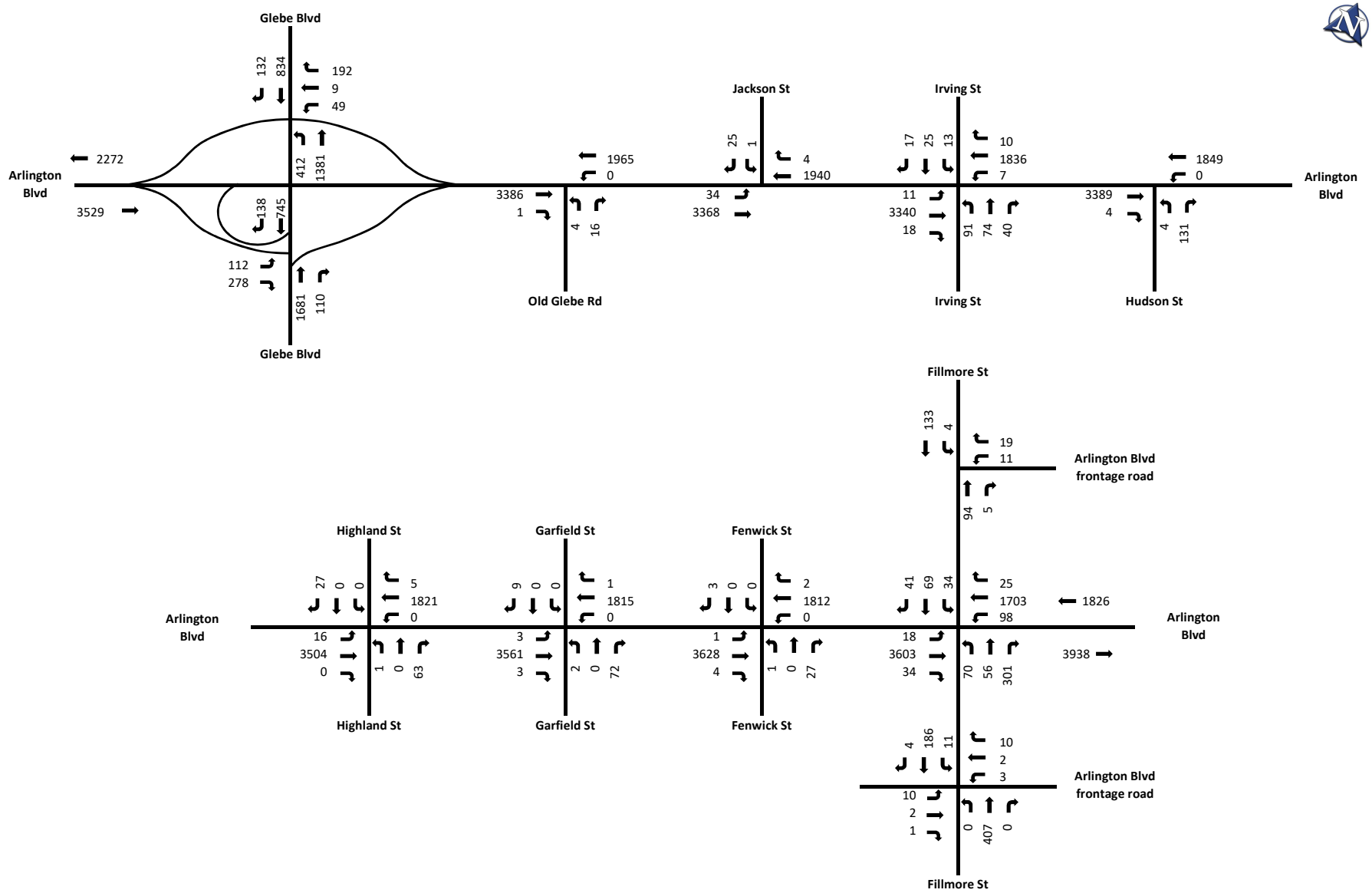

Not To Scale (NTS)

Weekday AM Peak Hour Volume

2030 Traffic Volumes - Balanced

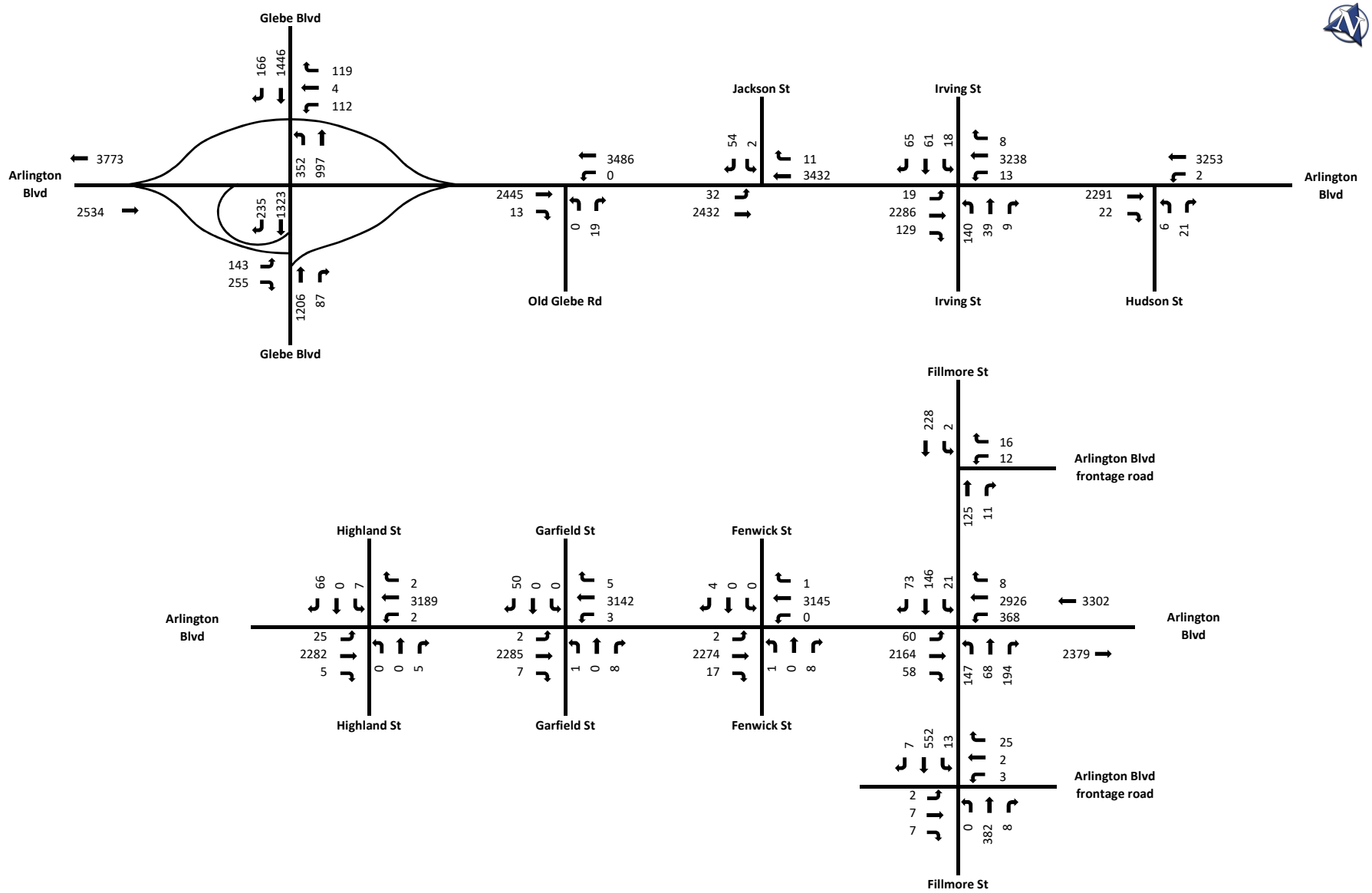

Not To Scale (NTS)

Weekday PM Peak Hour Volume

2030 Traffic Volumes - Balanced

Appendix D – Arlington County Intersection Signal Timings

MaxTime Timing Sheet

Administration

Unit Information

Controller ID	42
Main St.	Glebe Rd
Side St.	Arlington Blvd

Adaptor	IP Address	Subnet Mask	Default Gateway
1	10.140.5.165	255.255.255.240	10.140.5.161
2	0.0.0.0	0.0.0.0	0.0.0.0

Serial Ports:

Port	Desc	Function	Address	Baud	Bits	Stop	Parity	Flow	CTS	RTS
1	SP1/Port 2	None	1	9600	8	1	None	None	0	0
2	SP2/Port 3	None	1	9600	8	1	None	None	0	0
3	SP3/SDLC	None	1	9600	8	1	None	None	0	0
4	SP4/Com A	None	1	9600	8	1	None	None	0	0
5	SP5/FIO	None	1	9600	8	1	None	None	0	0
6	SP6/Front Panel	None	1	9600	8	1	None	None	0	0
7	SP7	None	1	9600	8	1	None	None	0	0
8	SP2/Com B	None	1	9600	8	1	None	None	0	0

Unit Parameters

Startup Fash	5	Autro Ped Clr	Disable	Red Revert	4.0	Backup Time	1
All Red Exit Flash	0	Grn flash Freg.	60	Yel Flash Freq.	60	MCE Sequence	1
MCE Enable	Enable	Primary Start	0.0	Secondary Start	0.0	Free Sequence	1

Phase Parameters

Phases	1	2	3	4	5	6	7	8	9	10	11	12	13	14	15	16
Walk Time	0	7	7	0	0	7	7	0	0	0	0	0	0	0	0	0
Clear Time	0	22	16	0	0	22	15	0	0	0	0	0	0	0	0	0
Don't Walk	0	0	0	0	0	0	0	0	0	0	0	0	0	0	0	0
Min Green	0	5	5	5	0	5	5	5	0	0	1	1	1	1	1	1
Passage	0.0	0.0	2.0	2.0	0.0	0.0	2.0	2.0	0.0	0.0	0.0	0.0	0.0	0.0	0.0	0.0
Max-1	0	55	20	20	0	55	25	18	0	0	1	1	1	1	1	1
Max-2	0	0	0	0	0	0	0	0	0	0	0	0	0	0	0	0
Yel Change	4.0	4.0	4.0	4.0	4.0	4.0	4.0	4.0	3.0	3.0	2.0	2.0	3.0	3.0	3.0	3.0
Red _Clear	3.0	2.5	2.0	2.5	0.0	2.5	2.0	2.0	0.0	0.0	0.0	0.0	0.0	0.0	0.0	0.0
Red_Revert	0.0	0.0	0.0	0.0	0.0	0.0	0.0	0.0	0.0	0.0	0.0	0.0	0.0	0.0	0.0	0.0
Added_Intial	0.0	0.0	0.0	0.0	0.0	0.0	0.0	0.0	0.0	0.0	0.0	0.0	0.0	0.0	0.0	0.0
Max_Intial	0	0	0	0	0	0	0	0	0	0	0	0	0	0	0	0
Time_B4_Reduc	0	0	0	0	0	0	0	0	0	0	0	0	0	0	0	0
Cars_B4_Reduc	0	0	0	0	0	0	0	0	0	0	0	0	0	0	0	0
TimeToReduce	0	0	0	0	0	0	0	0	0	0	0	0	0	0	0	0
ReduceBy	0.0	0.0	0.0	0.0	0.0	0.0	0.0	0.0	0.0	0.0	0.0	0.0	0.0	0.0	0.0	0.0
Min_Gap	0.0	0.0	0.0	0.0	0.0	0.0	0.0	0.0	0.0	0.0	0.0	0.0	0.0	0.0	0.0	0.0
Dyn_Max_Limit	0	0	0	0	0	0	0	0	0	0	0	0	0	0	0	0
Dyn_Max_Step	0.0	0.0	0.0	0.0	0.0	0.0	0.0	0.0	0.0	0.0	0.0	0.0	0.0	0.0	0.0	0.0
Delayed_Green	0	0	0	0	0	0	0	0	0	0	0	0	0	0	0	0
Delay_Ped	0	0	0	0	0	0	0	0	0	0	0	0	0	0	0	0

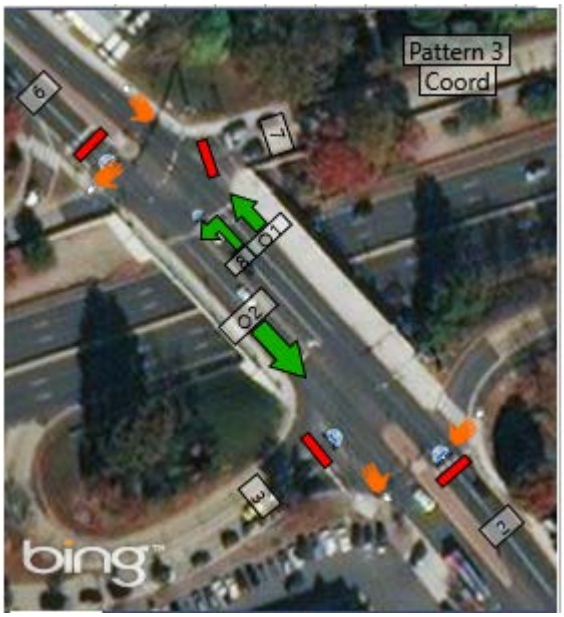

Phases	1	2	3	4	5	6	7	8	9	10	11	12	13	14	15	16
Alt_Walk	0	0	0	0	0	0	0	0	0	0	0	0	0	0	0	0
Alt2_Walk																
Alt_Ped_Clr	0	0	0	0	0	0	0	0	0	0	0	0	0	0	0	0
Alt2_Ped_Clr																
Pre_Green	0.0	0.0	0.0	0.0	0.0	0.0	0.0	0.0	0.0	0.0	0.0	0.0	0.0	0.0	0.0	0.0
Pr_Clearance	0.0	0.0	0.0	0.0	0.0	0.0	0.0	0.0	0.0	0.0	0.0	0.0	0.0	0.0	0.0	0.0
Add_Red_Clear	0	0	0	0	0	0	0	0	0	0	0	0	0	0	0	0

Phase Options

Phases	1	2	3	4	5	6	7	8	9	10	11	12	13	14	15	16
Enable:		X	X	X		X	X	X								
Auto Flash Ent.				X				X								
Auto Flash Exit		X				X										
Non Actuated I		X				X										
Non Actuated II																
NonLock Mem:			X	X			X	X								
Min Veh Recall:																
Max Veh Recall:		X		X		X										
Ped Recall:		X				X										
Soft Veh Recall:																
Dual Entry:				X				X								
Sim Gap Dis																
Act Rest Walk																
Cond Service		X				X										
YelPedClr																
RedClrPedClr																
CondReservice																
YelMinOverride																
NoStartCall																

Phase Configuration

Ph.	Startup	Ring	Concurrent	No Service Phases	Description
1	None	1	5,6		
2	Yellow Change	1	5,6		N/B
3	Phase Not On	1	7,8		E/B Ramp
4	Phase Not On	1	7,8		Dummy
5	None	2	1,2		
6	Secondary Start	2	1,2		S/B
7	Phase Not On	2	3,4		W/B Ramp
8	Phase Not On	2	3,4		N/B LT

Sequence 1

Ring	Phases
1	1,2,a,3,4,b
2	5,6,a,7,8,b
3	
4	
5	
6	
7	
8	
9	
10	
11	
12	
13	
14	
15	
16	

Sequence 2

Ring	Phases
1	2,1,a,4,3,b
2	5,6,a,7,8,b
3	
4	
5	
6	
7	
8	
9	
10	
11	
12	
13	
14	
15	
16	

Sequence 3

Ring	Phases
1	
2	
3	
4	
5	
6	
7	
8	
9	
10	
11	
12	
13	
14	
15	
16	

Sequence 4

Ring	Phases
1	
2	
3	
4	
5	
6	
7	
8	
9	
10	
11	
12	
13	
14	
15	
16	

Sequence 5

Ring	Phases
1	
2	
3	
4	
5	
6	
7	
8	
9	
10	
11	
12	
13	
14	
15	
16	

Sequence 6

Ring	Phases
1	
2	
3	
4	
5	
6	
7	
8	
9	
10	
11	
12	
13	
14	
15	
16	

Sequence 7

Ring	Phases
1	
2	
3	
4	
5	
6	
7	
8	
9	
10	
11	
12	
13	
14	
15	
16	

Sequence 8

Ring	Phases
1	
2	
3	
4	
5	
6	
7	
8	
9	
10	
11	
12	
13	
14	
15	
16	

Vehicle Detection Parameters

Det.	Call Ph	Additional Call Phase	Switch Phase	Delay	Extend	Queue Limit	No Activity	Max Presence	Erratic Counts	Failed Time
1	3		0	0.0	0.0	0	0	0	0	0
2	0		0	0.0	0.0	0	0	0	0	0
3	7		0	0.0	0.0	0	0	0	0	0
4	0		0	0.0	0.0	0	0	0	0	0
5	8		0	0.0	0.0	0	0	0	0	0
6	0		0	0.0	0.0	0	0	0	0	0
7	0		0	0.0	0.0	0	0	0	0	0
8	0		0	0.0	0.0	0	0	0	0	0
9	0		0	0.0	0.0	0	0	0	0	0
10	0		0	0.0	0.0	0	0	0	0	0
11	0		0	0.0	0.0	0	0	0	0	0
12	0		0	0.0	0.0	0	0	0	0	0
13	0		0	0.0	0.0	0	0	0	0	0
14	0		0	0.0	0.0	0	0	0	0	0
15	0		0	0.0	0.0	0	0	0	0	0
16	0		0	0.0	0.0	0	0	0	0	0

Vehicle Detection Options

Detector	1	2	3	4	5	6	7	8	9	10	11	12	13	14	15	16	17	18	19	20
Volume Detector																				
Occupancy																				
Yellow Lock Call																				
Red Lock call																				
Passage	X	X	X	X	X	X	X	X	X	X	X	X	X	X	X	X	X	X	X	X
Quene																				
Call																				

Data Collection Period	0

Pedestrian Detectors

Det	Call Phase	Call Ovlp	No Act	Max Presence	Erratic Counts
1	2	0	0	0	0
2	3	0	0	0	0
3	6	0	0	0	0
4	7	0	0	0	0
5	0	0	0	0	0
6	6	0	0	0	0
7	0	0	0	0	0
8	8	0	0	0	0

Overlaps

OLP	Type	Incuded Phases	Modifier Phases	Trail GRN	Trail YEL	Trail RED	Delay	Flash	Descriptions
1	Normal	2,8		0	0.0	0.0	0.0	Off	
2	Normal	4,6		0	0.0	0.0	0.0	Off	
3	FYA - 4 Section	6	8	0	0.0	0.0	0.0	Off	
4	Off			0	0.0	0.0	0.0	Off	
5	Off			0	0.0	0.0	0.0	Off	
6	Off			0	0.0	0.0	0.0	Off	

Coordination Parameters

Operational Mode	Correction Mode	Maximum Mode	Force Mode
Automatic	Shortway (Auto)	Max Inhibit	Fixed

Patterns

Patt.	Cycle	Offset 1	Offset 2	Offset 2	Split	Sequence	Ref. Color	Max Mode
1	115	16	0	0	1	1	Green	Max Inhibit
2	140	42	0	0	2	1	Green	Max Inhibit
3	130	17	0	0	3	1	Green	Max Inhibit
4	135	24	0	0	4	1	Green	Max Inhibit
5	0	0	0	0	0	0	Green	Max Inhibit

Split 1

PH.	Time	Coord PH	Ref PH	Mode
1	0			None
2	60	X	X	None
3	30			None
4	25			None
5	0			None
6	60	X		None
7	30			None
8	25			None
9	0			None
10	0			None
11	0			None
12	0			None

Split 2

PH.	Time	Coord PH	Ref PH	Mode
1	0			None
2	75	X	X	None
3	35			None
4	30			None
5	0			None
6	75	X		None
7	28			None
8	37			None
9	0			None
10	0			None
11	0			None
12	0			None

Split 3

PH.	Time	Coord PH	Ref PH	Mode
1	0			None
2	74	X	X	None
3	30			None
4	26			None
5	0			None
6	74	X		None
7	30			None
8	26			None
9	0			None
10	0			None
11	0			None
12	0			None

Split 4

PH.	Time	Coord PH	Ref PH	Mode
1	0			None
2	72	X	X	None
3	35			None
4	28			None
5	0			None
6	72	X		None
7	35			None
8	28			None
9	0			None
10	0			None
11	0			None
12	0			None

Ring	1	2	3	4	5	6	7	8	9	10	11	12	13	14	15	16
Offset																

Day Plan 1

Month of Year						Days of Week							Days of Month															
J	F	M	A	M	J	S	M	T	W	T	F	S	1	2	3	4	5	6	7	8	9	10	11	12	13	14	15	16
X	X	X	X	X	X		X	X	X	X	X		X	X	X	X	X	X	X	X	X	X	X	X	X	X	X	X
J	A	S	O	N	D								17	18	19	20	21	22	23	24	25	26	27	28	29	30	31	
X	X	X	X	X	X								X	X	X	X	X	X	X	X	X	X	X	X	X	X	X	

Day Plan 2

Month of Year						Days of Week							Days of Month															
J	F	M	A	M	J	S	M	T	W	T	F	S	1	2	3	4	5	6	7	8	9	10	11	12	13	14	15	16
X	X	X	X	X	X							X	X	X	X	X	X	X	X	X	X	X	X	X	X	X	X	X
J	A	S	O	N	D								17	18	19	20	21	22	23	24	25	26	27	28	29	30	31	
X	X	X	X	X	X								X	X	X	X	X	X	X	X	X	X	X	X	X	X	X	

Day Plan 3

Month of Year						Days of Week							Days of Month															
J	F	M	A	M	J	S	M	T	W	T	F	S	1	2	3	4	5	6	7	8	9	10	11	12	13	14	15	16
X	X	X	X	X	X	X							X	X	X	X	X	X	X	X	X	X	X	X	X	X	X	X
J	A	S	O	N	D								17	18	19	20	21	22	23	24	25	26	27	28	29	30	31	
X	X	X	X	X	X								X	X	X	X	X	X	X	X	X	X	X	X	X	X	X	

Day Plan 4

Month of Year						Days of Week							Days of Month															
J	F	M	A	M	J	S	M	T	W	T	F	S	1	2	3	4	5	6	7	8	9	10	11	12	13	14	15	16
X							X	X	X	X	X		X															
J	A	S	O	N	D								17	18	19	20	21	22	23	24	25	26	27	28	29	30	31	

Actions		Aux.			Special Functions						
Act	Pattern	1	2	3	1	2	3	4	5	6	7	8
1	Pattern 1											
2	Pattern 2											
3	Pattern 3											
4	Pattern 4											
5	Pattern 5											
6	Pattern 6											
7	Pattern 7											
8	Pattern 8											
9	Pattern 9											
10	Pattern 10											

IO Modules

IO Mod	TYPE
1	TS2-1 Small A Connector
2	TS2 MMU
3	TS2 TF1 BIU
4	TS2 TF2 BIU
5	TS2 DR1 BIU
6	TS2 DR2 BIU
7	None
8	None
9	None
10	None

Channel Configuration

Chan	Ctrl Type	Source
1	None	0
2	Phase Vehicle	2
3	Phase Vehicle	3
4	None	4
5	Phase Vehicle	8
6	Phase Vehicle	6
7	Phase Vehicle	7
8	None	0
9	Phase Ped	2
10	Phase Ped	3

Chan	Ctrl Type	Source
11	Phase Ped	6
12	Phase Ped	7
13	Overlap	1
14	Overlap	2
15	Overlap	3
16	None	0
17	None	0
18	None	0
19	None	0
20	None	0

Channel Options

Channel	1	2	3	4	5	6	7	8	9	10	11	12	13	14	15	16
Flash Yellow																
Flash Red																
Altr Flash																
Channel	17	18	19	20	21	22	23	24	25	26	27	28	29	30	31	32
Flash Yellow																
Flash Red																
Altr Flash																

MaxTime Timing Sheet

Administration

Unit Information

Controller ID	43
Main St.	Arlington Blvd
Side St.	Irving St

Adaptor	IP Address	Subnet Mask	Default Gateway
1	10.140.7.5	255.255.255.240	10.140.7.1
2	0.0.0.0	0.0.0.0	0.0.0.0

Serial Ports:

Port	Desc	Function	Address	Baud	Bits	Stop	Parity	Flow	CTS	RTS
1	SP1/Port 2	None	1	9600	8	1	None	None	0	0
2	SP2/Port 3	None	1	9600	8	1	None	None	0	0
3	SP3/SDLC	None	1	9600	8	1	None	None	0	0
4	SP4/Com A	None	1	9600	8	1	None	None	0	0
5	SP5/FIO	None	1	9600	8	1	None	None	0	0
6	SP6/Front Panel	None	1	9600	8	1	None	None	0	0
7	SP7	None	1	9600	8	1	None	None	0	0
8	SP2/Com B	None	1	9600	8	1	None	None	0	0

Unit Parameters

Startup Fash	5	Autro Ped Clr	Enable	Red Revert	2.0	Backup Time	600
All Red Exit Flash	0	Grn flash Freg.	60	Yel Flash Freq.	60	MCE Sequence	1
MCE Enable	Enable	Primary Start	0.0	Secondary Start	0.0	Free Sequence	1

Phase Parameters

Phases	1	2	3	4	5	6	7	8	9	10	11	12	13	14	15	16
Walk Time	0	7	0	7	0	7	0	7	0	0	0	0	0	0	0	0
Clear Time	0	13	0	26	0	13	0	26	0	0	0	0	0	0	0	0
Don't Walk	0	0	0	0	0	0	0	0	0	0	0	0	0	0	0	0
Min Green	0	5	0	5	0	5	0	5	0	0	0	0	0	0	0	0
Passage	0.0	0.0	0.0	4.0	0.0	0.0	0.0	4.0	0.0	0.0	0.0	0.0	0.0	0.0	0.0	0.0
Max-1	0	60	0	45	0	60	0	45	0	0	0	0	0	0	0	0
Max-2	0	0	0	0	0	0	0	0	0	0	0	0	0	0	0	0
Yel Change	4.0	5.0	4.0	4.0	5.0	5.0	4.0	4.0	4.0	4.0	3.0	3.0	3.0	3.0	3.0	3.0
Red _Clear	0.0	3.5	0.0	4.0	0.0	3.5	0.0	4.0	0.0	0.0	0.0	0.0	0.0	0.0	0.0	0.0
Red_Revert	0.0	0.0	0.0	0.0	0.0	0.0	0.0	0.0	0.0	0.0	0.0	0.0	0.0	0.0	0.0	0.0
Added_Intial	0.0	0.0	0.0	0.0	0.0	0.0	0.0	0.0	0.0	0.0	0.0	0.0	0.0	0.0	0.0	0.0
Max_Intial	0	0	0	0	0	0	0	0	0	0	0	0	0	0	0	0
Time_B4_Reduc	0	0	0	0	0	0	0	0	0	0	0	0	0	0	0	0
Cars_B4_Reduc	0	0	0	0	0	0	0	0	0	0	0	0	0	0	0	0
TimeToReduce	0	0	0	0	0	0	0	0	0	0	0	0	0	0	0	0
ReduceBy	0.0	0.0	0.0	0.0	0.0	0.0	0.0	0.0	0.0	0.0	0.0	0.0	0.0	0.0	0.0	0.0
Min_Gap	0.0	0.0	0.0	0.0	0.0	0.0	0.0	0.0	0.0	0.0	0.0	0.0	0.0	0.0	0.0	0.0
Dyn_Max_Limit	0	0	0	0	0	0	0	0	0	0	0	0	0	0	0	0
Dyn_Max_Step	0.0	0.0	0.0	0.0	0.0	0.0	0.0	0.0	0.0	0.0	0.0	0.0	0.0	0.0	0.0	0.0
Delayed_Green	0	0	0	0	0	0	0	0	0	0	0	0	0	0	0	0
Delay_Ped	0	0	0	0	0	0	0	0	0	0	0	0	0	0	0	0

Phases	1	2	3	4	5	6	7	8	9	10	11	12	13	14	15	16
Alt_Walk	0	0	0	0	0	0	0	0	0	0	0	0	0	0	0	0
Alt2_Walk																
Alt_Ped_Clr	0	0	0	0	0	0	0	0	0	0	0	0	0	0	0	0
Alt2_Ped_Clr																
Pre_Green	0.0	0.0	0.0	0.0	0.0	0.0	0.0	0.0	0.0	0.0	0.0	0.0	0.0	0.0	0.0	0.0
Pr_Clearance	0.0	0.0	0.0	0.0	0.0	0.0	0.0	0.0	0.0	0.0	0.0	0.0	0.0	0.0	0.0	0.0
Add_Red_Clear	0	0	0	0	0	0	0	0	0	0	0	0	0	0	0	0

Phase Options

Phases	1	2	3	4	5	6	7	8	9	10	11	12	13	14	15	16
Enable:		X		X		X		X								
Auto Flash Ent.				X				X								
Auto Flash Exit		X				X										
Non Actuated I																
Non Actuated II																
NonLock Mem:				X				X								
Min Veh Recall:																
Max Veh Recall:		X				X										
Ped Recall:		X				X										
Soft Veh Recall:																
Dual Entry:				X				X								
Sim Gap Dis																
Act Rest Walk																
Cond Service		X				X										
YelPedClr																
RedClrPedClr																
CondReservice																
YelMinOverride																
NoStartCall																

Phase Configuration

Ph.	Startup	Ring	Concurrent	No Service Phases	Description
1	None	0			
2	Yellow Change	1	6		Arlington Blvd
3	None	0			
4	Phase Not On	1	8		Irving St
5	None	0			
6	Yellow Change	2	2		Arlington Blvd
7	None	0			
8	Phase Not On	2	4		

Sequence 1

Ring	Phases
1	2,a,4,b
2	6,a,8,b
3	
4	
5	
6	
7	
8	
9	
10	
11	
12	
13	
14	
15	
16	

Sequence 2

Ring	Phases
1	2,1,a,3,4,b
2	6,a,8,b
3	
4	
5	
6	
7	
8	
9	
10	
11	
12	
13	
14	
15	
16	

Sequence 3

Ring	Phases
1	1,2,a,4,3,b
2	5,6,a,7,8,b
3	
4	
5	
6	
7	
8	
9	
10	
11	
12	
13	
14	
15	
16	

Sequence 4

Ring	Phases
1	2,1,a,4,3,b
2	5,6,a,7,8,b
3	
4	
5	
6	
7	
8	
9	
10	
11	
12	
13	
14	
15	
16	

Sequence 5

Ring	Phases
1	1,2,a,3,4,b
2	6,5,a,7,8,b
3	
4	
5	
6	
7	
8	
9	
10	
11	
12	
13	
14	
15	
16	

Sequence 6

Ring	Phases
1	2,1,a,3,4,b
2	6,5,a,7,8,b
3	
4	
5	
6	
7	
8	
9	
10	
11	
12	
13	
14	
15	
16	

Sequence 7

Ring	Phases
1	1,2,a,4,3,b
2	6,5,a,7,8,b
3	
4	
5	
6	
7	
8	
9	
10	
11	
12	
13	
14	
15	
16	

Sequence 8

Ring	Phases
1	2,1,a,4,3,b
2	6,5,a,7,8,b
3	
4	
5	
6	
7	
8	
9	
10	
11	
12	
13	
14	
15	
16	

Vehicle Detection Parameters

Det.	Call Ph	Additional Call Phase	Switch Phase	Delay	Extend	Queue Limit	No Activity	Max Presence	Erratic Counts	Failed Time
1	2		0	0.0	0.0	0	0	0	0	0
2	0		0	0.0	0.0	0	0	0	0	0
3	0		0	0.0	0.0	0	0	0	0	0
4	0		0	0.0	0.0	0	0	0	0	0
5	4		0	0.0	0.0	0	0	0	0	0
6	6		0	0.0	0.0	0	0	0	0	0
7	0		0	0.0	0.0	0	0	0	0	0
8	0		0	0.0	0.0	0	0	0	0	0
9	6		0	0.0	0.0	0	0	0	0	0
10	0		0	0.0	0.0	0	0	0	0	0
11	0		0	0.0	0.0	0	0	0	0	0
12	0		0	0.0	0.0	0	0	0	0	0
13	8		0	0.0	0.0	0	0	0	0	0
14	8		0	0.0	0.0	0	0	0	0	0
15	0		0	0.0	0.0	0	0	0	0	0
16	0		0	0.0	0.0	0	0	0	0	0

Vehicle Detection Options

Detector	1	2	3	4	5	6	7	8	9	10	11	12	13	14	15	16	17	18	19	20
Volume Detector			X	X																
Occupancy			X	X																
Yellow Lock Call																				
Red Lock call			X																	
Passage	X	X	X	X	X	X	X	X	X	X	X	X	X	X	X	X				
Quene																				
Call																				

Data Collection Period	60

Pedestrian Detectors

Det	Call Phase	Call Ovlp	No Act	Max Presence	Erratic Counts
1	2	0	0	0	0
2	4	0	0	0	0
3	6	0	0	0	0
4	8	0	0	0	0
5	0	0	0	0	0
6	0	0	0	0	0
7	0	0	0	0	0
8	0	0	0	0	0

Overlaps

OLP	Type	Incuded Phases	Modifier Phases	Trail GRN	Trail YEL	Trail RED	Delay	Flash	Descriptions
1	Off			0	0.0	0.0	0.0	Off	
2	Off			0	0.0	0.0	0.0	Off	
3	Off			0	0.0	0.0	0.0	Off	
4	Off			0	0.0	0.0	0.0	Off	
5	Off			0	0.0	0.0	0.0	Off	
6	Off			0	0.0	0.0	0.0	Off	

Coordination Parameters

Operational Mode	Correction Mode	Maximum Mode	Force Mode
Automatic	Shortway (Auto)	Max Inhibit	Floating

Patterns

Patt.	Cycle	Offset 1	Offset 2	Offset 2	Split	Sequence	Ref. Color	Max Mode
1	110	8	0	0	1	1	Green	Max Inhibit
2	205	13	0	0	2	1	Green	Max Inhibit
3	165	65	0	0	3	1	Green	Max Inhibit
4	136	64	0	0	4	1	Green	Max Inhibit
5	0	0	0	0	0	0	Green	Max Inhibit

Split 1

PH.	Time	Coord PH	Ref PH	Mode
1	0			None
2	69	X	X	None
3	0			None
4	41			None
5	0			None
6	69	X	X	None
7	0			None
8	41			None
9	0			None
10	0			None
11	0			None
12	0			None

Split 2

PH.	Time	Coord PH	Ref PH	Mode
1	0			None
2	164	X	X	None
3	0			None
4	41			None
5	0			None
6	164	X	X	None
7	0			None
8	41			None
9	0			None
10	0			None
11	0			None
12	0			None

Split 3

PH.	Time	Coord PH	Ref PH	Mode
1	0			None
2	124	X	X	None
3	0			None
4	41			None
5	0			None
6	124	X	X	None
7	0			None
8	41			None
9	0			None
10	0			None
11	0			None
12	0			None

Split 4

PH.	Time	Coord PH	Ref PH	Mode
1	0			None
2	95	X	X	None
3	0			None
4	41			None
5	0			None
6	95	X	X	None
7	0			None
8	41			None
9	0			None
10	0			None
11	0			None
12	0			None

Ring	1	2	3	4	5	6	7	8	9	10	11	12	13	14	15	16
Offset																

Day Plan 1

Month of Year						Days of Week							Days of Month															
J	F	M	A	M	J	S	M	T	W	T	F	S	1	2	3	4	5	6	7	8	9	10	11	12	13	14	15	16
X	X	X	X	X	X		X	X	X	X	X		X	X	X	X	X	X	X	X	X	X	X	X	X	X	X	X
J	A	S	O	N	D								17	18	19	20	21	22	23	24	25	26	27	28	29	30	31	
X	X	X	X	X	X								X	X	X	X	X	X	X	X	X	X	X	X	X	X	X	

Day Plan 2

Month of Year						Days of Week							Days of Month															
J	F	M	A	M	J	S	M	T	W	T	F	S	1	2	3	4	5	6	7	8	9	10	11	12	13	14	15	16
X	X	X	X	X	X	X							X	X	X	X	X	X	X	X	X	X	X	X	X	X	X	X
J	A	S	O	N	D								17	18	19	20	21	22	23	24	25	26	27	28	29	30	31	
X	X	X	X	X	X								X	X	X	X	X	X	X	X	X	X	X	X	X	X	X	

Day Plan 3

Month of Year						Days of Week							Days of Month															
J	F	M	A	M	J	S	M	T	W	T	F	S	1	2	3	4	5	6	7	8	9	10	11	12	13	14	15	16
X	X	X	X	X	X							X	X	X	X	X	X	X	X	X	X	X	X	X	X	X	X	X
J	A	S	O	N	D								17	18	19	20	21	22	23	24	25	26	27	28	29	30	31	
X	X	X	X	X	X								X	X	X	X	X	X	X	X	X	X	X	X	X	X	X	

Day Plan 4

Month of Year						Days of Week							Days of Month															
J	F	M	A	M	J	S	M	T	W	T	F	S	1	2	3	4	5	6	7	8	9	10	11	12	13	14	15	16
X							X	X	X	X	X		X															
J	A	S	O	N	D								17	18	19	20	21	22	23	24	25	26	27	28	29	30	31	

Actions		Aux.			Special Functions						
Act	Pattern	1	2	3	1	2	3	4	5	6	7	8
1	Pattern 1											
2	Pattern 2											
3	Pattern 3											
4	Pattern 4											
5	Pattern 5											
6	Pattern 6											
7	Pattern 7											
8	Pattern 8											
9	Pattern 9											
10	Pattern 10											

IO Modules

IO Mod	TYPE
1	TS1 A B C D Connectors
2	TS2 MMU
3	TS2 TF1 BIU
4	TS2 TF2 BIU
5	TS2 DR1 BIU
6	None
7	None
8	None
9	None
10	None

Channel Configuration

Chan	Ctrl Type	Source
1	None	0
2	Phase Vehicle	2
3	None	0
4	Phase Vehicle	4
5	None	0
6	Phase Vehicle	6
7	None	0
8	Phase Vehicle	8
9	Phase Ped	2
10	Phase Ped	4

Chan	Ctrl Type	Source
11	Phase Ped	6
12	Phase Ped	8
13	None	0
14	None	0
15	None	0
16	None	0
17	None	0
18	None	0
19	None	0
20	None	0

Channel Options

Channel	1	2	3	4	5	6	7	8	9	10	11	12	13	14	15	16
Flash Yellow		X				X										
Flash Red	X		X	X	X		X	X								
Altr Flash	X			X	X			X								
Channel	17	18	19	20	21	22	23	24	25	26	27	28	29	30	31	32
Flash Yellow																
Flash Red																
Altr Flash																

MaxTime Timing Sheet

Administration

Unit Information

Controller ID	44
Main St.	Arlington Blvd
Side St.	Fillmore St

Adaptor	IP Address	Subnet Mask	Default Gateway
1	10.140.6.228	255.255.255.240	10.140.6.225
2	0.0.0.0	0.0.0.0	0.0.0.0

Serial Ports:

Port	Desc	Function	Address	Baud	Bits	Stop	Parity	Flow	CTS	RTS
1	SP1/Port 2	None	1	9600	8	1	None	None	0	0
2	SP2/Port 3	None	1	9600	8	1	None	None	0	0
3	SP3/SDLC	None	1	9600	8	1	None	None	0	0
4	SP4/Com A	None	1	9600	8	1	None	None	0	0
5	SP5/FIO	None	1	9600	8	1	None	None	0	0
6	SP6/Front Panel	None	1	9600	8	1	None	None	0	0
7	SP7	None	1	9600	8	1	None	None	0	0
8	SP2/Com B	None	1	9600	8	1	None	None	0	0

Unit Parameters

Startup Fash	5	Autro Ped Clr	Enable	Red Revert	5.0	Backup Time	60
All Red Exit Flash	0	Grn flash Freg.	60	Yel Flash Freq.	60	MCE Sequence	1
MCE Enable	Enable	Primary Start	0.0	Secondary Start	0.0	Free Sequence	1

Phase Parameters

Phases	1	2	3	4	5	6	7	8	9	10	11	12	13	14	15	16
Walk Time	0	7	0	5	0	7	0	5	0	0	0	0	0	0	0	0
Clear Time	0	12	0	27	0	12	0	27	0	0	0	0	0	0	0	0
Don't Walk	0	0	0	0	0	0	0	0	0	0	0	0	0	0	0	0
Min Green	5	5	0	5	5	5	0	5	0	0	0	0	0	0	0	0
Passage	2.0	0.0	0.0	4.0	3.0	0.0	0.0	4.0	0.0	0.0	0.0	0.0	0.0	0.0	0.0	0.0
Max-1	15	45	0	45	35	50	0	50	0	0	0	0	0	0	0	0
Max-2	0	0	0	0	0	0	0	0	0	0	0	0	0	0	0	0
Yel Change	4.5	5.5	3.0	4.0	4.5	5.5	4.0	4.0	3.0	3.0	3.0	3.0	3.0	3.0	3.0	3.0
Red _Clear	3.0	1.0	0.0	5.0	3.0	1.0	0.0	5.0	0.0	0.0	0.0	0.0	0.0	0.0	0.0	0.0
Red_Revert	0.0	0.0	0.0	0.0	0.0	0.0	0.0	0.0	0.0	0.0	0.0	0.0	0.0	0.0	0.0	0.0
Added_Intial	0.0	0.0	0.0	0.0	0.0	0.0	0.0	0.0	0.0	0.0	0.0	0.0	0.0	0.0	0.0	0.0
Max_Intial	0	0	0	0	0	0	0	0	0	0	0	0	0	0	0	0
Time_B4_Reduc	0	0	0	0	0	0	0	0	0	0	0	0	0	0	0	0
Cars_B4_Reduc	0	0	0	0	0	0	0	0	0	0	0	0	0	0	0	0
TimeToReduce	0	0	0	0	0	0	0	0	0	0	0	0	0	0	0	0
ReduceBy	0.0	0.0	0.0	0.0	0.0	0.0	0.0	0.0	0.0	0.0	0.0	0.0	0.0	0.0	0.0	0.0
Min_Gap	0.0	0.0	0.0	0.0	0.0	0.0	0.0	0.0	0.0	0.0	0.0	0.0	0.0	0.0	0.0	0.0
Dyn_Max_Limit	0	0	0	0	0	0	0	0	0	0	0	0	0	0	0	0
Dyn_Max_Step	0.0	0.0	0.0	0.0	0.0	0.0	0.0	0.0	0.0	0.0	0.0	0.0	0.0	0.0	0.0	0.0
Delayed_Green	0	0	0	0	0	0	0	0	0	0	0	0	0	0	0	0
Delay_Ped	0	0	0	0	0	0	0	0	0	0	0	0	0	0	0	0

Phases	1	2	3	4	5	6	7	8	9	10	11	12	13	14	15	16
Alt_Walk	0	0	0	0	0	0	0	0	0	0	0	0	0	0	0	0
Alt2_Walk																
Alt_Ped_Clr	0	0	0	0	0	0	0	0	0	0	0	0	0	0	0	0
Alt2_Ped_Clr																
Pre_Green	0.0	0.0	0.0	0.0	0.0	0.0	0.0	0.0	0.0	0.0	0.0	0.0	0.0	0.0	0.0	0.0
Pr_Clearance	0.0	0.0	0.0	0.0	0.0	0.0	0.0	0.0	0.0	0.0	0.0	0.0	0.0	0.0	0.0	0.0
Add_Red_Clear	0	0	0	0	0	0	0	0	0	0	0	0	0	0	0	0

Phase Options

Phases	1	2	3	4	5	6	7	8	9	10	11	12	13	14	15	16
Enable:	X	X		X	X	X		X								
Auto Flash Ent.				X				X								
Auto Flash Exit		X				X										
Non Actuated I																
Non Actuated II																
NonLock Mem:	X			X	X			X								
Min Veh Recall:				X	X			X								
Max Veh Recall:	X	X				X										
Ped Recall:		X		X		X		X								
Soft Veh Recall:																
Dual Entry:				X				X								
Sim Gap Dis																
Act Rest Walk		X				X										
Cond Service																
YelPedClr																
RedClrPedClr																
CondReservice																
YelMinOverride																
NoStartCall																

Phase Configuration

Ph.	Startup	Ring	Concurrent	No Service Phases	Description
1	Phase Not On	1	6,5		Arlington Blvd WB/LT
2	Yellow Change	1	6,5		Arlington Blvd EB
3	None	0			
4	Phase Not On	1	8		Filmore St SB
5	Phase Not On	2	1,2		Arlington Blvd EB/LT
6	Yellow Change	2	1,2		Arlington Blvd WB
7	None	0			
8	Phase Not On	2	4		Filmore St NB

Sequence 1

Ring	Phases
1	1,2,a,4,b
2	6,5,a,8,b
3	
4	
5	
6	
7	
8	
9	
10	
11	
12	
13	
14	
15	
16	

Sequence 2

Ring	Phases
1	2,1,a,3,4,b
2	6,5,a,8,b
3	
4	
5	
6	
7	
8	
9	
10	
11	
12	
13	
14	
15	
16	

Sequence 3

Ring	Phases
1	1,2,a,4,3,b
2	5,6,a,7,8,b
3	
4	
5	
6	
7	
8	
9	
10	
11	
12	
13	
14	
15	
16	

Sequence 4

Ring	Phases
1	2,1,a,4,3,b
2	5,6,a,7,8,b
3	
4	
5	
6	
7	
8	
9	
10	
11	
12	
13	
14	
15	
16	

Sequence 5

Ring	Phases
1	1,2,a,3,4,b
2	6,5,a,7,8,b
3	
4	
5	
6	
7	
8	
9	
10	
11	
12	
13	
14	
15	
16	

Sequence 6

Ring	Phases
1	2,1,a,3,4,b
2	6,5,a,7,8,b
3	
4	
5	
6	
7	
8	
9	
10	
11	
12	
13	
14	
15	
16	

Sequence 7

Ring	Phases
1	1,2,a,4,3,b
2	6,5,a,7,8,b
3	
4	
5	
6	
7	
8	
9	
10	
11	
12	
13	
14	
15	
16	

Sequence 8

Ring	Phases
1	2,1,a,4,3,b
2	6,5,a,7,8,b
3	
4	
5	
6	
7	
8	
9	
10	
11	
12	
13	
14	
15	
16	

Vehicle Detection Parameters

Det.	Call Ph	Additional Call Phase	Switch Phase	Delay	Extend	Queue Limit	No Activity	Max Presence	Erratic Counts	Failed Time
1	2		0	0.0	0.0	0	0	0	0	0
2	2		0	0.0	0.0	0	0	0	0	0
3	2		0	0.0	0.0	0	0	0	0	0
4	2		0	0.0	0.0	0	0	0	0	0
5	1		0	0.0	0.0	0	0	0	0	0
6	6		0	0.0	0.0	0	0	0	0	0
7	6		0	0.0	0.0	0	0	0	0	0
8	6		0	0.0	0.0	0	0	0	0	0
9	4		0	0.0	0.0	0	0	0	0	0
10	4		0	0.0	0.0	0	0	0	0	0
11	4		0	0.0	0.0	0	0	0	0	0
12	4		0	0.0	0.0	0	0	0	0	0
13	3		0	0.0	0.0	0	0	0	0	0
14	3		0	0.0	0.0	0	0	0	0	0
15	3		0	0.0	0.0	0	0	0	0	0
16	3		0	0.0	0.0	0	0	0	0	0

Vehicle Detection Options

Detector	**1**	**2**	**3**	**4**	**5**	**6**	**7**	**8**	**9**	**10**	**11**	**12**	**13**	**14**	**15**	**16**	**17**	**18**	**19**	**20**
Volume Detector	X	X	X	X	X	X	X	X	X	X	X	X	X	X	X	X				
Occupancy	X	X	X	X	X	X	X	X	X	X	X	X	X	X	X	X				
Yellow Lock Call																				
Red Lock call			X																	
Passage	X	X	X	X	X	X	X	X	X	X	X	X	X	X	X	X				
Quene																				
Call																				

Data Collection Period	60

Pedestrian Detectors

Det	Call Phase	Call Ovlp	No Act	Max Presence	Erratic Counts
1	2	0	0	0	0
2	3	0	0	0	0
3	6	0	0	0	0
4	0	0	0	0	0
5	0	0	0	0	0
6	0	0	0	0	0
7	0	0	0	0	0
8	0	0	0	0	0

Overlaps

OLP	Type	Incuded Phases	Modifier Phases	Trail GRN	Trail YEL	Trail RED	Delay	Flash	Descriptions
1	Off			0	0.0	0.0	0.0	Off	
2	Off			0	0.0	0.0	0.0	Off	
3	Off			0	0.0	0.0	0.0	Off	
4	Off			0	0.0	0.0	0.0	Off	
5	Off			0	0.0	0.0	0.0	Off	
6	Off			0	0.0	0.0	0.0	Off	

Coordination Parameters

Operational Mode	Correction Mode	Maximum Mode	Force Mode
Automatic	Shortway (Auto)	Max Inhibit	Floating

Patterns

Patt.	Cycle	Offset 1	Offset 2	Offset 2	Split	Sequence	Ref. Color	Max Mode
1	110	7	0	0	1	1	Green	Max Inhibit
2	205	10	0	0	2	1	Green	Max Inhibit
3	165	58	0	0	3	1	Green	Max Inhibit
4	136	56	0	0	4	1	Green	Max Inhibit
5	0	0	0	0	0	0	Green	Max Inhibit

Split 1

PH.	Time	Coord PH	Ref PH	Mode
1	19			None
2	50	X	X	None
3	0			None
4	41			None
5	13			None
6	56	X	X	None
7	0			None
8	41			None
9	0			None
10	0			None
11	0			None
12	0			None

Split 2

PH.	Time	Coord PH	Ref PH	Mode
1	17			None
2	147	X	X	None
3	0			None
4	41			None
5	15			None
6	149	X	X	None
7	0			None
8	41			None
9	0			None
10	0			None
11	0			None
12	0			None

Split 3

PH.	Time	Coord PH	Ref PH	Mode
1	39			None
2	85	X	X	None
3	0			None
4	41			None
5	14			None
6	110	X	X	None
7	0			None
8	41			None
9	0			None
10	0			None
11	0			None
12	0			None

Split 4

PH.	Time	Coord PH	Ref PH	Mode
1	28			None
2	67	X	X	None
3	0			None
4	41			None
5	14			None
6	81	X	X	None
7	0			None
8	41			None
9	0			None
10	0			None
11	0			None
12	0			None

Ring	1	2	3	4	5	6	7	8	9	10	11	12	13	14	15	16
Offset																

Day Plan 1

Month of Year						Days of Week							Days of Month															
J	F	M	A	M	J	S	M	T	W	T	F	S	1	2	3	4	5	6	7	8	9	10	11	12	13	14	15	16
X	X	X	X	X	X		X	X	X	X	X		X	X	X	X	X	X	X	X	X	X	X	X	X	X	X	X
J	A	S	O	N	D								17	18	19	20	21	22	23	24	25	26	27	28	29	30	31	
X	X	X	X	X	X								X	X	X	X	X	X	X	X	X	X	X	X	X	X	X	

Day Plan 2

Month of Year						Days of Week							Days of Month															
J	F	M	A	M	J	S	M	T	W	T	F	S	1	2	3	4	5	6	7	8	9	10	11	12	13	14	15	16
X	X	X	X	X	X	X							X	X	X	X	X	X	X	X	X	X	X	X	X	X	X	X
J	A	S	O	N	D								17	18	19	20	21	22	23	24	25	26	27	28	29	30	31	
X	X	X	X	X	X								X	X	X	X	X	X	X	X	X	X	X	X	X	X	X	

Day Plan 3

Month of Year						Days of Week							Days of Month															
J	F	M	A	M	J	S	M	T	W	T	F	S	1	2	3	4	5	6	7	8	9	10	11	12	13	14	15	16
X	X	X	X	X	X							X	X	X	X	X	X	X	X	X	X	X	X	X	X	X	X	X
J	A	S	O	N	D								17	18	19	20	21	22	23	24	25	26	27	28	29	30	31	
X	X	X	X	X	X								X	X	X	X	X	X	X	X	X	X	X	X	X	X	X	

Day Plan 4

Month of Year						Days of Week							Days of Month															
J	F	M	A	M	J	S	M	T	W	T	F	S	1	2	3	4	5	6	7	8	9	10	11	12	13	14	15	16
J	A	S	O	N	D								17	18	19	20	21	22	23	24	25	26	27	28	29	30	31	

Actions		Aux.			Special Functions						
Act	Pattern	1	2	3	1	2	3	4	5	6	7	8
1	Pattern 1											
2	Pattern 2											
3	Pattern 3											
4	Pattern 4											
5	Pattern 5											
6	Pattern 6											
7	Pattern 7											
8	Pattern 8											
9	Pattern 9											
10	Pattern 10											

IO Modules

IO Mod	TYPE
1	TS1 A B C D Connectors
2	TS2 MMU
3	TS2 TF1 BIU
4	TS2 TF2 BIU
5	TS2 DR1 BIU
6	None
7	None
8	None
9	None
10	None

Channel Configuration

Chan	Ctrl Type	Source
1	Phase Vehicle	1
2	Phase Vehicle	2
3	None	0
4	Phase Vehicle	4
5	Phase Vehicle	5
6	Phase Vehicle	6
7	None	0
8	Phase Vehicle	8
9	Phase Ped	2
10	Phase Ped	4

Chan	Ctrl Type	Source
11	Phase Ped	6
12	Phase Ped	8
13	None	0
14	None	0
15	None	0
16	None	0
17	None	0
18	None	0
19	None	0
20	None	0

Channel Options

Channel	1	2	3	4	5	6	7	8	9	10	11	12	13	14	15	16
Flash Yellow		X				X										
Flash Red	X		X	X	X		X	X								
Altr Flash	X			X	X			X								
Channel	17	18	19	20	21	22	23	24	25	26	27	28	29	30	31	32
Flash Yellow																
Flash Red																
Altr Flash																

Appendix E – VISSIM Base Model Development and Calibration Methodology and Validation

MEMORANDUM

Date: February 20, 2020

To: Bobby Mangalath – VDOT NOVA District

Subject: VISSIM Base Model Development and Calibration Methodology and Validation

Work Order Number: 45877-003

Project: Route 50 STARS Safety and Operational Improvements Study – Arlington County

INTRODUCTION

The Virginia Department of Transportation (VDOT) has initiated this STARS study to evaluate the operational and safety conditions of Arlington Boulevard (US Route 50) from Route 120 (Glebe Road) to Route 6622 (Fillmore Street) and identify improvements that can be incorporated into the Six-Year Improvement Plan (SYIP).

The purpose of this memorandum is to describe the methodologies and assumptions for the development and calibration of the VISSIM microscopic model used to generate measures of effectiveness to support the Route 50 STARS Safety and Operational Improvements Study in Arlington County in accordance with the approved Framework Document.

VISSIM analyses are being conducted for the following scenarios:

- **Existing Conditions (Year 2019)**
- **No Build Conditions (Year 2030):** No "No Build" improvements are proposed along Route 50 within the study limits in the National Capital Region Transportation Planning Board's financially constrained element of Visualize 2045 and the VDOT Six Year Improvement Program (SYIP).
- **Build Conditions (Year 2030):** This scenario includes the improvement alternatives along Route 50.

VISSIM MODEL DEVELOPMENT

Traffic Study Area: The traffic operations analysis study area limits were established in accordance with the approved Framework Document to document the impacts to traffic operations and safety as a result of the proposed improvements on Route 50 between Route 120 (Glebe Road) and Route 6622 (Fillmore Street). **Figure 1** depicts the STARS study area. However, the VISSIM model extends along Route 50 west of the Glebe Road interchange and east of the Washington Boulevard interchange in order to capture the back of queue. Midblock intersections/interchanges outside the project study area were not coded (e.g., Washington Boulevard interchange) in the areas outside the study area since traffic data is not available for these intersections/interchanges. Extending the VISSIM model limits to capture the back of queue will aid in comparing No Build versus Build queue lengths along the corridor during the evaluation of alternatives.

Figure 1: VISSIM Operational Analysis Study Area

Data Collection: Traffic data collected for the development and calibration of the VISSIM model includes traffic volumes (see **Attachment A**), travel time runs, and observed maximum queue lengths. Turning movement counts at intersections were collected on weekdays from 6:30 to 9:30 AM and 3:30 to 6:30 PM and 48-hour classification counts were collected at two different locations on Route 50. All counts were collected on a Wednesday or Thursday in May 2019 when school was in session. Turning movement volumes were collected at the eight unsignalized and four signalized intersections noted below within the study area as documented in the approved Framework Document. Field-collected maximum queue lengths were collected within the study area on Route 50 approaching the signalized intersections at Irving Street and Fillmore Street. The 48-hour classification counts were collected on Route 50 west of Jackson Street and between Highland Street and Garfield Street.

1. N Glebe Road and Route 50 WB ramp – signalized
2. N Glebe Road and Route 50 EB ramp – signalized
3. US 50 and Irving Street – signalized
4. US 50 and Fillmore Street – signalized
5. N Fillmore Street and Route 50 Frontage Road – unsignalized

6. N Fillmore Street and Route 50 Frontage Road – unsignalized
7. Route 50 and Fenwick Street – unsignalized
8. Route 50 and Garfield Street – unsignalized
9. Route 50 and Highland Street – unsignalized
10. Route 50 and Hudson Street – unsignalized
11. Route 50 and N Jackson Street – unsignalized
12. Route 50 at Old Glebe Road - unsignalized

Peak hour queues on Route 50 were collected on Wednesdays or Thursdays in May 2019, June 2019, or January 2020. Queue lengths were recorded for at least five consecutive cycle lengths at the signalized intersections of Irving Street and Fillmore Street during the AM and PM peak hours. Maximum queue lengths were then calculated based on the number of vehicles observed during the queuing observations or the location of the back of queue noted during field observations. **Table 1** includes the back of queues along eastbound and westbound Route 50 based on field observations. However, it should be noted that maximum queue lengths vary significantly from day to day. The travel speeds collected during the travel time runs were used to supplement the maximum queue observations.

Table 1: Observed Maximum Queue Lengths

Approach	AM Peak Hour	PM Peak Hour
EB Route 50 at Irving Street	4,900 feet (approximately to Pershing Drive)	530 feet
EB Route 50 at Fillmore Street	Through Irving Street intersection	Through Irving Street intersection
WB Route 50 at Fillmore Street	500 - 750 feet [1]	2,600 feet (approximately to Washington Blvd off-ramp)
WB Route 50 at Irving Street	125 feet	700 - 1,160 feet [1]

[1] Observed Maximum Queue Length ranges are the maximum queue lengths observed on different days

During the AM peak hour, the eastbound Route 50 queue approaching the Fillmore Street intersection extends through the Irving Street intersection. The eastbound Route 50 queue approaching the Irving Street intersection extends beyond the Glebe Road interchange and the west end of the study corridor to approximately Pershing Drive partially due to the downstream queueing from Fillmore Street spilling back into the Irving Street intersection as well as friction from the George Mason Drive and Glebe Road interchanges and the eastbound weave between George Mason Drive and Glebe Road. Additionally, the permissive-only left turn from eastbound Route 50 to northbound Irving Street causes eastbound Route 50 vehicles traveling in the left lane to have to stop behind vehicles waiting to make the permissive left turn onto Irving Street. This causes sudden last-minute lane changing out of the left lane as well as a lower volume of vehicles travelling in the left lane through the corridor. Westbound Route 50 queues approaching Irving Street and Fillmore Street do not extend through upstream signalized intersections or interchanges during the AM peak hour.

During the PM peak hour, the eastbound Route 50 queue approaching Fillmore Street extends through the Irving Street intersection which contributes to the eastbound Route 50 queue approaching Irving Street extending approximately 530 feet. The westbound Route 50 queue approaching Irving Street extends upstream approximately 1,160 feet upstream to almost Fillmore Street while the westbound Route 50 queue approaching Fillmore Street extends upstream approximately 2,600 feet and outside the VISSIM model limit to the off-ramp to Washington Boulevard. The westbound maximum queue approaching Fillmore Street is partially due to friction near the Washington Boulevard interchange.

Travel time runs were performed along eastbound and westbound Route 50 from Glebe Road to west of the Washington Boulevard interchange during both the AM and PM peak hours. Travel time runs were completed in May 2019 and were performed on a Wednesday when school was in session using the floating car method where the drivers traveled with the average speed of traffic. GPS devices were used to record vehicle speeds. The speeds and travel

times were segmented at each unsignalized and signalized intersection along the Route 50 corridor as well as the Glebe Road overpass and the Route 50 frontage road entrance located just west of the Washington Boulevard interchange. At least ten travel runs per direction were conducted during each peak period. All of the travel time runs were conducted within the selected AM and PM peak periods. Variability in travel time runs is partially due to signal timings at the two signalized intersections along the corridor at Fillmore Street and Irving Street and when the vehicles entered the corridor in relation to the signal cycles.

Selection of Peak Periods and Peak Hours: RITIS travel time data in combination with traffic volume data along Route 50 was used to establish morning and evening peak hours corresponding to the most congested conditions along Route 50 with the highest traffic volumes. Based on a review of hourly traffic volume data along eastbound and westbound Route 50, the AM peak hour was evaluated from 8:00 AM to 9:00 AM and the PM peak hour was evaluated from 5:00 PM to 6:00 PM. The identified peak hours for the traffic analysis correspond to the one-hour AM and PM peak hours with the highest traffic volumes and longest travel times. Traffic volumes for the peak hours were balanced throughout the network. It should be noted that the RITIS data will not be directly used for model calibration purposes but was solely used to aid in the selection of the peak analysis periods.

Model Development: The existing conditions VISSIM models for the AM and PM peak hours were developed in accordance with VDOT's *Traffic Operations and Safety Analysis Manual – Version 1.0* (TOSAM) and *VISSIM User Guide – Version 1.0* which include:

- Lane geometry based on aerial photography and field observations to produce the study area network;
- Desired speeds based on posted speed limits;
- Static traffic assignment setup including vehicle inputs, vehicle compositions, and vehicle travel routes based on the balanced peak hour traffic volumes; and
- Traffic signal timings provided by Arlington County at the following signals:
  - Glebe Road and Route 50 WB ramps
  - Glebe Road and Route 50 EB ramps
  - Route 50 and Irving Street
  - Route 50 and Fillmore Street

Public transportation and pedestrians were not coded into the VISSIM network or analyzed. However, pedestrian timings will be included as part of the development of timings in Synchro where appropriate.

Simulation Time and Seeding Period: Based on a review of hourly traffic volumes collected for the project, the models were developed for one hour (3,600 seconds) during the AM and PM peak periods (8:00 AM to 9:00 AM and 5:00 AM to 6:00 PM). The VISSIM models also include a seeding period to ensure that the model is properly loaded prior to producing measures of effectiveness. The seeding period should generally be based on the time it takes for a vehicle to travel the entire corridor during the peak hour in the peak direction. The seeding period should also allow time for traffic congestion to build before the analysis hour begins. During preliminary planning of the VISSIM models, a 30 minute seeding period and two analysis hours were established during the AM and PM peak periods. However, during further analysis, it was determined that only one peak hour during the AM and PM peak periods was necessary for analysis. Because the analysis volumes and VISSIM models already contained 2.5 hours during the AM and PM peak periods, the VISSIM analysis moving forward will contain a 90 minute (5,400 second) seeding period from 6:30 to 8:00 AM and 3:30 to 5:00 PM in order to make use of the extra hour previously coded into the VISSIM files as well as to ensure proper loading of the model prior to the peak hours.

Additional VISSIM Model Input Parameters: **Table 1** summarizes additional VISSIM model input parameters used in the model development.

Table 1: VISSIM Model Inputs

Parameter	Assumption/Value Used
VISSIM Version	Version 8.00-15
Arrival Distribution	Exact Volume
Car Following Model	Wiedemann 74 on all arterials
Entry Traffic Volumes	Existing balanced field-collected data input in 15-minute time intervals
Evaluations	Queue Counters, Node Evaluations, Link Evaluations, Vehicle Travel Times
Heavy Vehicle Percentages (Vehicle Compositions)	Existing field-collected peak hour heavy vehicle percentages input in the vehicle compositions/vehicle inputs on each arterial and consistent through the entire simulation period
Link Speed (Desired Speed Distributions)	Posted speed limit with range of +/- 5 mph on all arterials
Number of Simulation Runs	10 (see discussion below)
Origin-Destination (O-D)	All vehicle routes use combined static routing and consider subsequent routing decisions consistent through the entire simulation period based on the balanced peak hour volumes
Performance Measure Intervals	One hour
Simulation Resolution	10
Simulation Run Time	9,000 seconds (5,400 second seeding and 3,600 second performance interval)
Turning Speed (Reduced Speed Area)	7.5-15.5 mph for right turns and 12.4-18.6 mph for left turns
Vehicle Fleet	NorthAmericanDefault.inpx file provided on the VDOT website
Traffic Signal Timings	Existing signal timing plans
Random Seeding	1, with increment of 1

VISSIM Model Number of Runs

Appendix F of the TOSAM provides guidance on the use of the VDOT Sample Size Determination Tool, which is based on the FHWA 95th percentile confidence level sample size determination methodology. The measures of effectiveness (MOE) selected for the sample size determination are travel times and volumes. These two MOEs were evaluated along Route 50 as noted below:

- Eastbound and westbound Route 50 travel time from Glebe Road overpass to Fillmore Street
- Eastbound and westbound Route 50 volume from Glebe Road overpass to Irving Street
- Eastbound and westbound Route 50 volume from Irving Street to Fillmore Street

The vehicle travel times and volumes were collected from VISSIM for each run. The Sample Size Determination Tool indicates that 10 runs are sufficient for all locations during both the AM and PM peak hours. The Sample Size Determination Tool spreadsheets for all scenarios are included in **Attachment B**.

VISSIM Model Calibration Criteria

The calibration criteria used for the VISSIM microscopic model includes intersection volumes and travel times as shown in **Table 2** and is based on the approved Framework Document. A quantitative comparison of maximum queue lengths was also performed between the observed and simulated queue lengths to confirm the model is reasonably matching observed congestion. Simulated turning movement volumes at signalized intersections and approach volumes at unsignalized intersections were collected using Node Summaries, travel times were collected using Vehicle Travel Times, and simulated maximum queue lengths were collected using Queue Counters in VISSIM. Simulated maximum queue lengths were used to guide the calibration process but were not considered a formal calibration measure. Due to the variability in queue length, the effort was focused at critical locations where recurring congestion causes extensive queueing. Due to extensive queues that form along eastbound and westbound Route 50, mainline through queue calibration focused on whether queues extend through upstream intersections, consistent with field observations.

Table 2: VISSIM Model Calibration Criteria

Simulated Measure	Calibration Thresholds
Simulated Traffic Volume (vehicles per hour): • 85% of movements at critical (signalized) intersections • 85% of approaches for unsignalized intersections	Within ± 20% for <100 vph Within ± 15% for ≥ 100 vph to <300 vph Within ± 10% for ≥ 300 vph to <1,000 vph Within ± 5% for ≥ 1,000 vph
Simulated Travel Time (seconds): • 85% of the Route 50 segments between signalized intersections • Overall corridor from the Glebe Road overpass to west of the Washington Boulevard interchange	Within ± 30% of observed travel times
Maximum Queue Length (feet) • EB Route 50 approaching Irving Street and Fillmore Street • WB Route 50 approaching Irving Street and Fillmore Street	Quantitative comparison to field observations

During the VISSIM model calibration process, the following parameters were adjusted to achieve the target thresholds:

- AM peak direction demand volumes were increased to replicate the existing throughput and travel times in order to meet the TOSAM calibration thresholds approaching the signalized intersections on Route 50. Specifically, 100 additional vehicles were added along eastbound Route 50 during the seeding period from 7 AM to 8 AM and 200 additional vehicles were added along eastbound Route 50 from 8 AM to 9 AM at the entry to the network.

- Driver behavior – car-following and lane change parameters to capture the level of driver aggressiveness, the ability to merge and diverge, and the gap between two vehicles in the same traffic flow. All modified driving behavior parameters fall within the suggested ranges provided in Appendix E of the TOSAM.

- Lane change distances to ensure smooth yet realistic traffic flow.
- Priority rules to capture the aggressiveness or cautiousness of vehicles turning during permissive left-turns and to prevent vehicles from blocking intersections.
- Stop sign locations to ensure vehicles are stopping at roughly the same locations as in the field.

CALIBRATION RESULTS

This section describes the model calibration results for each validation target shown in **Table 2**.

Traffic Volumes: The traffic volume calibration results for both AM and PM peak hours are shown in **Table 3** for each of the calibration thresholds. Calibration criteria and thresholds are presented for each of the four traffic volume groups as specified in the Framework Document. For both the AM and PM peak hours, traffic volumes were reviewed for all movements at critical intersections and all approaches for unsignalized intersections within the VISSIM model study area and classified into the four volume groups. Tables summarizing the target traffic volumes, VISSIM modeled traffic volumes, and the calibration criteria for each signalized movement and unsignalized approach within the VISSIM model study area are included in **Attachment C** for both the AM and PM peak hours.

As shown in **Table 3**, the signalized traffic turning movements and unsignalized traffic approaches within the model study area meet the 85-percent calibration criteria for all volume groups in both the AM and PM peak hour models.

Table 3: Peak Hour Traffic Volume Summary

Simulated Measure	Calibration Thresholds	% Meeting Calibration Thresholds			
		AM Peak Hour		PM Peak Hour	
		Signalized Turns	Unsignalized Approaches	Signalized Turns	Unsignalized Approaches
Simulated Traffic Volume (vph): • 85% of movements at critical (signalized) intersections • 85% of approaches for unsignalized intersections	Within ± 20% for <100 vph	95%	100%	100%	100%
	Within ± 15% for ≥100 vph to <300 vph	100%	100%	100%	100%
	Within ± 10% for ≥300 vph to <1,000 vph	100%	100%	100%	100%
	Within ± 5% for ≥1,000 vph	100%	100%	100%	100%
	Total	**97%**	**100%**	**100%**	**100%**

Travel Times: Travel times for the VISSIM model were compared to the field-measured travel times which were collected during the peak hours. **Tables 4 and 5** summarize the observed travel times, the VISSIM simulated travel times, and the percent difference along eastbound and westbound Route 50, respectively.

Table 4: AM & PM Eastbound Peak Hour Travel Time Summary

Segment	AM Peak			PM Peak		
	Observed Travel Time (sec)	Simulated Travel Time (sec)	Percent Difference	Observed Travel Time (sec)	Simulated Travel Time (sec)	Percent Difference
From Glebe Road overpass	-	-	-	-	-	-
To Irving Street	135	99	27%	55	50	9%
To Fillmore Street	48	47	1%	55	55	-1%
To west of Washington Boulevard interchange	23	19	14%	20	19	4%
Corridor Total	**206**	**165**	**20%**	**130**	**125**	**4%**

As shown in **Table 4**, for all of the travel time segments along Route 50, 100% of the travel times meet the calibration threshold of 30% for the segment travel times. Additionally, the corridor total travel time meets the calibration threshold of 30% with a 20% difference in the AM peak hour and a 4% difference in the PM peak hour.

Table 5: AM & PM Westbound Peak Hour Travel Time Summary

Segment	AM Peak			PM Peak		
	Observed Travel Time (sec)	Simulated Travel Time (sec)	Percent Difference	Observed Travel Time (sec)	Simulated Travel Time (sec)	Percent Difference
From west of Washington Boulevard interchange	-	-	-	-	-	-
To Fillmore Street	28	31	-12%	69	50	28%
To Irving Street	25	23	8%	37	29	22%
To Glebe Road overpass	34	34	0%	38	36	5%
Corridor Total	**86**	**88**	**-2%**	**144**	**114**	**21%**

As shown in **Table 5**, for all of the travel time segments along Route 50, 100% of the travel times meet the calibration threshold of 30% for the segment travel times. Additionally, the corridor total travel time meets the calibration threshold of 30% with a -2% difference in the AM peak hour and a 21% difference in the PM peak hour.

Queue Lengths: Maximum queue lengths from the VISSIM models were compared to the field-observed maximum queue lengths on Route 50. Due to the variability in queue length along the corridor, calibration was focused at critical locations where recurring congestion causes extensive queueing. Due to extensive queues that form along eastbound and westbound Route 50, mainline through queue calibration focused on whether queues extend through upstream signalized intersections and interchanges.

Table 6 summarizes the field-observed maximum queue lengths, the VISSIM-modeled maximum queue lengths, and the differences for each mainline direction during the AM and PM peak hours. As shown in **Table 6**, the only maximum approach queue which extends into an upstream signalized intersection in the study area is eastbound Route 50 at Fillmore Street which extends into the Irving Street signalized intersection during the AM and PM peak hours. The VISSIM results showed similar maximum queueing for this approach during the AM peak hour and 4 vehicles (9%) less during the PM peak hour. On the westbound Route 50 approach to Irving Street, the VISSIM results are within 5 and 9 vehicles of the field observations during the AM and PM peak hours, respectively.

Entering the study corridor along the peak eastbound Route 50 direction approaching Irving Street and along the peak westbound Route 50 direction approaching Fillmore Street, the VISSIM model maximum queue lengths are less than field observations by 33 and 36 percent during the AM and PM peak hours, respectively. Although the maximum queues extend outside of the study area limits, the links entering the VISSIM model were extended to capture the back of the simulated queue. However, upstream intersections and interchanges outside of the study area were not included in the VISSIM model as noted above due to data not being available as part of this study effort. The differences between observed maximum queue lengths and simulated maximum queue lengths entering the Route 50 study corridor in the peak directions can be attributed to upstream interchanges outside of the study area causing friction and congestion which impacts the maximum queue lengths. During the AM peak hour, the eastbound Route 50 maximum queue length approaching Irving Street extends through the George Mason Drive interchange to approximately Pershing Drive partially due to congestion at the George Mason Drive and Glebe Road interchanges as well as the eastbound Route 50 weave between George Mason Drive and Glebe Road, which are located outside the study area and therefore not included in the VISSIM models. During the PM peak hour, the westbound Route 50 maximum queue length approaching Fillmore Street extends through the Washington Boulevard interchange to approximately the off-ramp to Washington Boulevard partially due to congestion occurring at the merges and diverges at the Washington Boulevard interchange which is located outside the study area and therefore not included in the VISSIM models.

Although there are differences between the simulated maximum queue lengths and the maximum observed queue lengths, the general extent of queuing reflects field conditions within the study limits. The simulated queue lengths under No Build conditions will be used as baseline for comparison to Build conditions queue lengths to evaluate the effectiveness of study alternatives. Therefore, it can be concluded that the model is reasonably calibrated for the purposes of the study to compare alternatives under consideration. The peak direction maximum queue lengths on Route 50 entering the study corridor serve as relative maximum queue lengths to compare future year design alternatives and do not represent actual field maximum queue lengths due to the traffic margining issues outside of the study area at the Washington Boulevard interchange and west of Glebe Road that are not included in the simulation models.

MEASURES OF EFFECTIVENESS (MOEs)

MOEs will be obtained from VISSIM to be consistent with the guidance in the TOSAM. Study area intersections will be evaluated using vehicle throughput (vph), delay (sec/veh), and maximum queue length (feet). The Route 50 corridor will be evaluated using travel times (minutes). LOS will not be provided as an MOE; however, metrics such as “severe congestion” and “light traffic conditions” corresponding to LOS will be used to depict congestion levels.

Table 6: Peak Hour Maximum Queue Length Summary

Approach	AM Peak				PM Peak			
	Observed Max Queue, feet (veh)	Simulated Max Queue, feet (veh)	Difference (%)	Difference (veh)	Observed Max Queue, feet (veh)	Simulated Max Queue, feet (veh)	Difference (%)	Difference (veh)
EB Route 50 at Irving Street	4,900 (196)	3,280 (131)	-33%	-65	530 (21)	673 (27)	27%	6
EB Route 50 at Fillmore Street	1,200 (48)	1,200 (48)	0%	0	1,200 (48)	1,096 (44)	-9%	-4
WB Route 50 at Fillmore Street	500-750 (20-30)	422 (16)	-18% to -45%	-4 to -14	2,600 (104)	1,657 (66)	-36%	-38
WB Route 50 at Irving Street	125 (5)	244 (10)	95%	5	700-1,160 (28-46)	932 (37)	33% to -19%	9 to -9

SUMMARY OF RESULTS

Traffic volumes and travel times were the two primary measures of effectiveness used to assess the calibration of the AM and PM peak hour VISSIM models. Queue lengths were also reviewed and quantitatively compared to field conditions. **Table 3** summarizes the traffic volumes, **Tables 4 and 5** summarize the travel times, and **Table 6** summarizes the queue length calibration data from the models.

Simulated traffic volumes from the VISSIM model were compared to the balanced traffic volumes. Calibration criteria and thresholds presented for each of the four traffic volume groups indicate that the traffic volume approaches and turns within the modeling network meet the overall 85-percent calibration criteria for all volume groups in both the AM and PM peak hour models.

Simulated travel times from the VISSIM model were compared to the field-collected travel times. All travel time segments along eastbound and westbound Route 50 meet the calibration threshold of 30% in the AM and PM peak hours. Additionally, the corridor total travel times meet the calibration threshold of 30% with a maximum difference of 21% during the AM and PM peak hours.

Simulated queue lengths from the VISSIM model were compared to field-collected queue lengths. During the AM and PM peak hours, the peak directions entering the network (eastbound approaching Irving Street and westbound approaching Fillmore Street) have 33% and 36%, respectively, lower maximum queue lengths than field conditions due to congestion at intersections and interchanges located outside the model study area that contribute to increased maximum queue lengths in the field. The maximum queue length calibration results along eastbound and westbound Route 50 between the signalized intersections of Irving Street and Fillmore Street are within 9 vehicles. It should be noted that the peak direction maximum queue lengths on Route 50 entering the study corridor serve as relative maximum queue lengths to compare future year design alternatives and do not represent actual field maximum queue lengths due to the traffic margining issues outside of the study area at the Washington Boulevard interchange and west of Glebe Road that are not included in the simulation models.

In summary, based on a comparison of field-collected data to the results obtained from the VISSIM AM and PM peak hour models, the Study Team concludes the AM and PM peak hour VISSIM models to be satisfactorily calibrated,

thereby providing the sensitivity necessary to evaluate future year traffic conditions for the Route 50 STARS Safety and Operational Improvements Study.

Attachment A: Existing Peak Hour Volumes

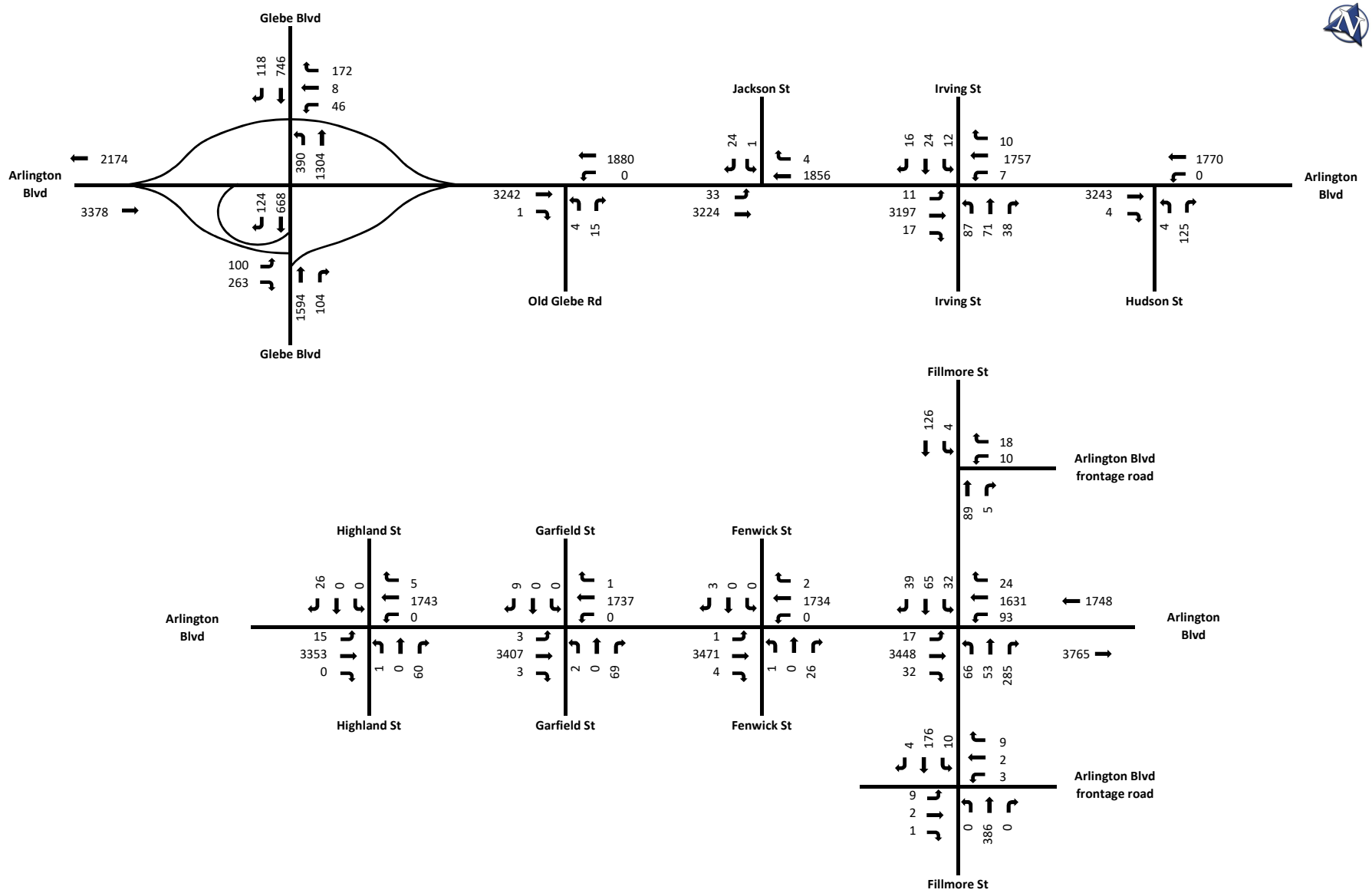

Not To Scale (NTS)

Weekday AM Peak Hour Volume

2019 Existing Traffic Volumes - Balanced

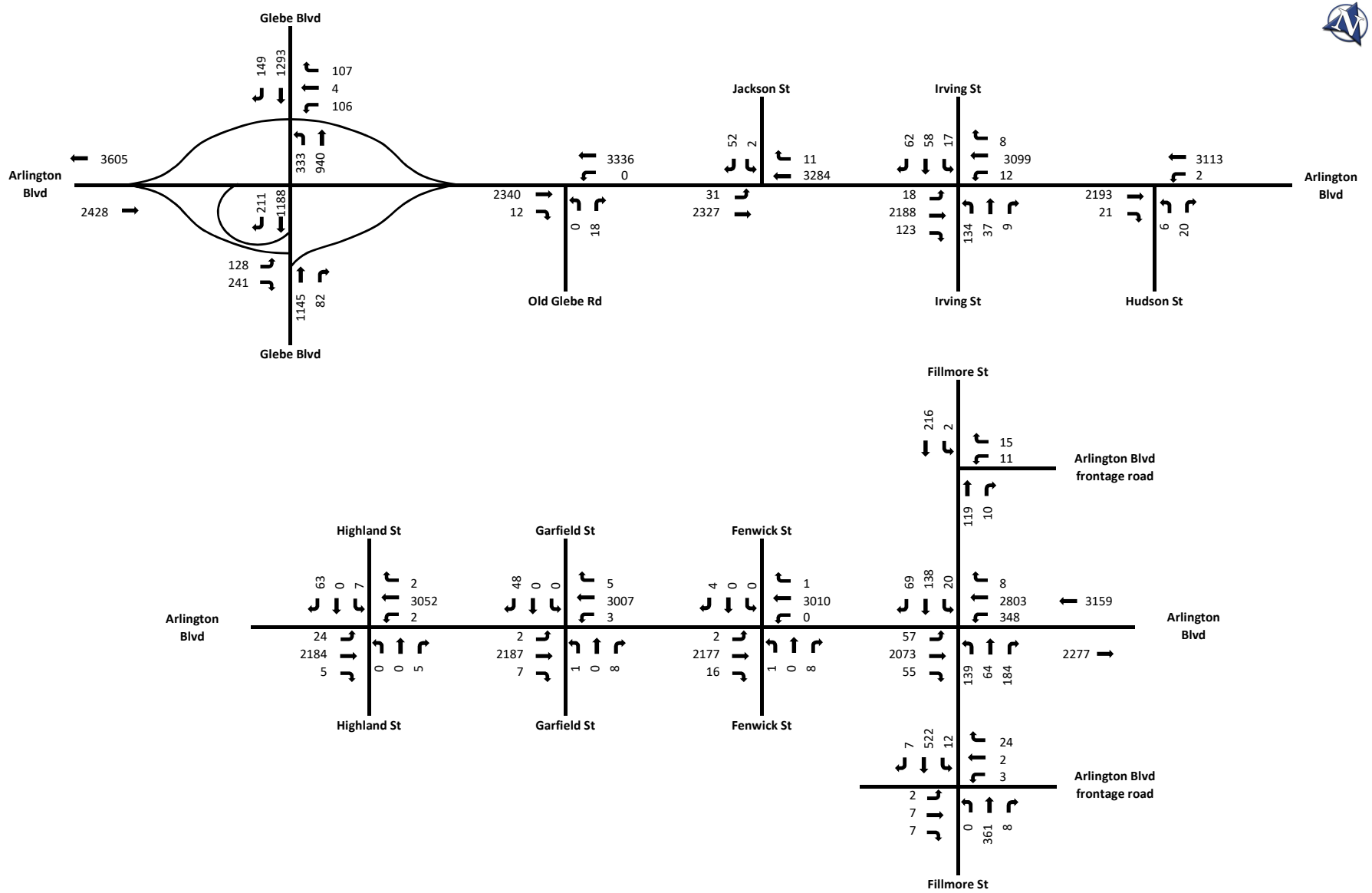

Not To Scale (NTS)

Weekday PM Peak Hour Volume

2019 Existing Traffic Volumes - Balanced

Attachment B: Sample Size Determination Tool Spreadsheets

Sample Size Determination Tool, Version 2.0

User Inputs	Sample Size (N) = Number of Model Runs
Constants	Sample Mean (X_s) = (1/N) ($X_1 + X_2 + X_3 \ldots + X_N$)
Outputs	Sample Standard Deviation (S_s) = $\sqrt{[(\Sigma(X-X_s)^2)/(N-1)]}$
	Sampling Error = $Z\ (S_s/\sqrt{N})$
	Confidence Level = $X_s \pm Z\ (S_s/\sqrt{N})$
	% of Sample Mean (E) = % Tolerance * X_s
	Sample Size Needed = $[(Z)^2 * (S_s)^2] / (E)^2$

EB Route 50, Glebe Rd to Fillmore St - AM

Model Iterations

Measure of Effectiveness (MOE):	Travel Time
Confidence Interval:	95%
Tolerance Error:	10%
Number of Model Runs:	10

Run Number	Travel Time (s)
1	167
2	164
3	152
4	115
5	141
6	167
7	138
8	107
9	160
10	149
11	
12	
13	
14	
15	
16	
17	
18	
19	
20	
21	
22	
23	
24	
25	
26	
27	
28	
29	
30	

Sample Size Outputs

N	=	10.0
X_s	=	145.9
S_s	=	21.1
E	=	14.6
Z	=	1.96

Sampling Error	=	13.06		
95% Confidence Interval	=	132.9	to	159.0
Percentage of Mean	=	8.95%		**Good**
Sample Size Needed	=	**10**		

Z is the number of standard deviations away from the mean corresponding to the required confidence level in a normal distribution.

Sample Size Determination Tool, Version 2.0

User Inputs	Sample Size (N) = Number of Model Runs
Constants	Sample Mean (X_s) = (1/N) ($X_1 + X_2 + X_3 \ldots + X_N$)
Outputs	Sample Standard Deviation (S_s) = $\sqrt{[(\Sigma(X-X_s)^2)/(N-1)]}$
	Sampling Error = $Z\ (S_s/\sqrt{N})$
	Confidence Level = $X_s \pm Z\ (S_s/\sqrt{N})$
	% of Sample Mean (E) = % Tolerance * X_s
	Sample Size Needed = $[(Z)^2 * (S_s)^2] / (E)^2$

WB Route 50, Fillmore St to Glebe Rd - AM

Model Iterations

Measure of Effectiveness (MOE):	Travel Time
Confidence Interval:	95%
Tolerance Error:	10%
Number of Model Runs:	10

Run Number	Travel Time (s)
1	56
2	57
3	56
4	57
5	57
6	57
7	56
8	57
9	56
10	56
11	
12	
13	
14	
15	
16	
17	
18	
19	
20	
21	
22	
23	
24	
25	
26	
27	
28	
29	
30	

Sample Size Outputs

N	=	10.0
X_s	=	56.5
S_s	=	0.4
E	=	5.7
Z	=	1.96

Sampling Error	=	0.27		
95% Confidence Interval	=	56.2	to	56.8
Percentage of Mean	=	0.48%		**Good**
Sample Size Needed	=	**10**		

Z is the number of standard deviations away from the mean corresponding to the required confidence level in a normal distribution.

Sample Size Determination Tool, Version 2.0

User Inputs	Sample Size (N) = Number of Model Runs
Constants	Sample Mean (X_s) = (1/N) ($X_1 + X_2 + X_3 \ldots + X_N$)
Outputs	Sample Standard Deviation (S_s) = $\sqrt{[(\Sigma(X-X_s)^2)/(N-1)]}$
	Sampling Error = $Z\ (S_s/\sqrt{N})$
	Confidence Level = $X_s \pm Z\ (S_s/\sqrt{N})$
	% of Sample Mean (E) = % Tolerance * X_s
	Sample Size Needed = $[(Z)^2 * (S_s)^2] / (E)^2$

EB Route 50, Glebe Rd to Irving St - AM

Model Iterations

Measure of Effectiveness (MOE):	Volume
Confidence Interval:	95%
Tolerance Error:	10%
Number of Model Runs:	10

Run Number	Volume
1	3246
2	3353
3	3367
4	3341
5	3398
6	3304
7	3365
8	3348
9	3424
10	3336
11	
12	
13	
14	
15	
16	
17	
18	
19	
20	
21	
22	
23	
24	
25	
26	
27	
28	
29	
30	

Sample Size Outputs

N	=	10.0
X_s	=	3348.3
S_s	=	49.0
E	=	334.8
Z	=	1.96

Sampling Error	=	30.35		
95% Confidence Interval	=	3318.0	to	3378.7
Percentage of Mean	=	0.91%		**Good**
Sample Size Needed	=	**10**		

Z is the number of standard deviations away from the mean corresponding to the required confidence level in a normal distribution.

Sample Size Determination Tool, Version 2.0

User Inputs	Sample Size (N) = Number of Model Runs
Constants	Sample Mean (X_s) = (1/N) ($X_1 + X_2 + X_3 \ldots + X_N$)
Outputs	Sample Standard Deviation (S_s) = $\sqrt{[(\Sigma(X-X_s)^2)/(N-1)]}$
	Sampling Error = $Z\ (S_s/\sqrt{N})$
	Confidence Level = $X_s \pm Z\ (S_s/\sqrt{N})$
	% of Sample Mean (E) = % Tolerance * X_s
	Sample Size Needed = $[(Z)^2 * (S_s)^2] / (E)^2$

EB Route 50, Irving St to Fillmore St - AM

Model Iterations

Measure of Effectiveness (MOE):	Volume
Confidence Interval:	95%
Tolerance Error:	10%
Number of Model Runs:	10

Run Number	Volume
1	3515
2	3594
3	3632
4	3582
5	3638
6	3565
7	3677
8	3589
9	3654
10	3558
11	
12	
13	
14	
15	
16	
17	
18	
19	
20	
21	
22	
23	
24	
25	
26	
27	
28	
29	
30	

Sample Size Outputs

N	=	10.0
X_s	=	3600.5
S_s	=	49.5
E	=	360.0
Z	=	1.96

Sampling Error	=	30.68		
95% Confidence Interval	=	3569.8	to	3631.2
Percentage of Mean	=	0.85%		**Good**
Sample Size Needed	=	**10**		

Z is the number of standard deviations away from the mean corresponding to the required confidence level in a normal distribution.

Sample Size Determination Tool, Version 2.0

User Inputs	Sample Size (N) = Number of Model Runs
Constants	Sample Mean (X_s) = (1/N) ($X_1 + X_2 + X_3 \ldots + X_N$)
Outputs	Sample Standard Deviation (S_s) = $\sqrt{[(\Sigma(X-X_s)^2)/(N-1)]}$
	Sampling Error = $Z\ (S_s/\sqrt{N})$
	Confidence Level = $X_s \pm Z\ (S_s/\sqrt{N})$
	% of Sample Mean (E) = % Tolerance * X_s
	Sample Size Needed = $[(Z)^2 * (S_s)^2] / (E)^2$

WB Route 50, Irving St to Glebe Rd - AM

Model Iterations

Measure of Effectiveness (MOE):	Volume
Confidence Interval:	95%
Tolerance Error:	10%
Number of Model Runs:	10

Run Number	Volume
1	1860
2	1876
3	1852
4	1848
5	1872
6	1864
7	1879
8	1860
9	1862
10	1840
11	
12	
13	
14	
15	
16	
17	
18	
19	
20	
21	
22	
23	
24	
25	
26	
27	
28	
29	
30	

Sample Size Outputs

N	=	10.0
X_s	=	1861.2
S_s	=	12.2
E	=	186.1
Z	=	1.96

Sampling Error	=	7.55		
95% Confidence Interval	=	1853.7	to	1868.8
Percentage of Mean	=	0.41%		**Good**
Sample Size Needed	=	**10**		

Z is the number of standard deviations away from the mean corresponding to the required confidence level in a normal distribution.

Sample Size Determination Tool, Version 2.0

User Inputs	Sample Size (N) = Number of Model Runs
Constants	Sample Mean (X_s) = (1/N) ($X_1 + X_2 + X_3 \ldots + X_N$)
Outputs	Sample Standard Deviation (S_s) = $\sqrt{[(\Sigma(X-X_s)^2)/(N-1)]}$
	Sampling Error = $Z\ (S_s/\sqrt{N})$
	Confidence Level = $X_s \pm Z\ (S_s/\sqrt{N})$
	% of Sample Mean (E) = % Tolerance * X_s
	Sample Size Needed = $[(Z)^2 * (S_s)^2] / (E)^2$

WB Route 50, Fillmore St to Irving St - AM

Model Iterations

Measure of Effectiveness (MOE):	Volume
Confidence Interval:	95%
Tolerance Error:	10%
Number of Model Runs:	10

Run Number	Volume
1	1742
2	1738
3	1724
4	1718
5	1718
6	1726
7	1752
8	1724
9	1717
10	1704
11	
12	
13	
14	
15	
16	
17	
18	
19	
20	
21	
22	
23	
24	
25	
26	
27	
28	
29	
30	

Sample Size Outputs

N	=	10.0
X_s	=	1726.2
S_s	=	14.0
E	=	172.6
Z	=	1.96

Sampling Error	=	8.67		
95% Confidence Interval	=	1717.6	to	1734.9
Percentage of Mean	=	0.50%		**Good**
Sample Size Needed	=	**10**		

Z is the number of standard deviations away from the mean corresponding to the required confidence level in a normal distribution.

Sample Size Determination Tool, Version 2.0

User Inputs	Sample Size (N) = Number of Model Runs
Constants	Sample Mean (X_s) = (1/N) ($X_1 + X_2 + X_3 \ldots + X_N$)
Outputs	Sample Standard Deviation (S_s) = $\sqrt{[(\Sigma(X-X_s)^2)/(N-1)]}$
	Sampling Error = $Z\ (S_s/\sqrt{N})$
	Confidence Level = $X_s \pm Z\ (S_s/\sqrt{N})$
	% of Sample Mean (E) = % Tolerance * X_s
	Sample Size Needed = $[(Z)^2 * (S_s)^2] / (E)^2$

EB Route 50, Glebe Rd to Fillmore St - PM

Model Iterations

Measure of Effectiveness (MOE):	Travel Time
Confidence Interval:	95%
Tolerance Error:	10%
Number of Model Runs:	10

Run Number	Travel Time (s)
1	95
2	99
3	109
4	106
5	103
6	97
7	97
8	104
9	98
10	143
11	
12	
13	
14	
15	
16	
17	
18	
19	
20	
21	
22	
23	
24	
25	
26	
27	
28	
29	
30	

Sample Size Outputs

N	=	10.0
X_s	=	105.2
S_s	=	14.2
E	=	10.5
Z	=	1.96

Sampling Error	=	8.78		
95% Confidence Interval	=	96.4	to	114.0
Percentage of Mean	=	8.35%		**Good**
Sample Size Needed	=	**10**		

Z is the number of standard deviations away from the mean corresponding to the required confidence level in a normal distribution.

Sample Size Determination Tool, Version 2.0

User Inputs	Sample Size (N) = Number of Model Runs
Constants	Sample Mean (X_s) = (1/N) ($X_1 + X_2 + X_3 \ldots + X_N$)
Outputs	Sample Standard Deviation (S_s) = $\sqrt{[(\Sigma(X-X_s)^2)/(N-1)]}$
	Sampling Error = $Z\ (S_s/\sqrt{N})$
	Confidence Level = $X_s \pm Z\ (S_s/\sqrt{N})$
	% of Sample Mean (E) = % Tolerance * X_s
	Sample Size Needed = $[(Z)^2 * (S_s)^2] / (E)^2$

WB Route 50, Fillmore St to Glebe Rd - PM

Model Iterations

Measure of Effectiveness (MOE):	Travel Time
Confidence Interval:	95%
Tolerance Error:	10%
Number of Model Runs:	10

Run Number	Travel Time (s)
1	63
2	68
3	65
4	63
5	61
6	61
7	74
8	61
9	62
10	66
11	
12	
13	
14	
15	
16	
17	
18	
19	
20	
21	
22	
23	
24	
25	
26	
27	
28	
29	
30	

Sample Size Outputs

N	=	10.0
X_s	=	64.3
S_s	=	4.3
E	=	6.4
Z	=	1.96

Sampling Error	=	2.64		
95% Confidence Interval	=	61.7	to	66.9
Percentage of Mean	=	4.10%		**Good**
Sample Size Needed	=	**10**		

Z is the number of standard deviations away from the mean corresponding to the required confidence level in a normal distribution.

Sample Size Determination Tool, Version 2.0

User Inputs	Sample Size (N) = Number of Model Runs
Constants	Sample Mean (X_s) = (1/N) ($X_1 + X_2 + X_3 \ldots + X_N$)
Outputs	Sample Standard Deviation (S_s) = $\sqrt{[(\Sigma(X-X_s)^2)/(N-1)]}$
	Sampling Error = $Z\ (S_s/\sqrt{N})$
	Confidence Level = $X_s \pm Z\ (S_s/\sqrt{N})$
	% of Sample Mean (E) = % Tolerance * X_s
	Sample Size Needed = $[(Z)^2 * (S_s)^2] / (E)^2$

EB Route 50, Glebe Rd to Irving St - PM

Model Iterations

Measure of Effectiveness (MOE):	Volume
Confidence Interval:	95%
Tolerance Error:	10%
Number of Model Runs:	10

Run Number	Volume
1	2306
2	2319
3	2319
4	2321
5	2290
6	2311
7	2319
8	2342
9	2334
10	2386
11	
12	
13	
14	
15	
16	
17	
18	
19	
20	
21	
22	
23	
24	
25	
26	
27	
28	
29	
30	

Sample Size Outputs

N	=	10.0
X_s	=	2324.8
S_s	=	25.7
E	=	232.5
Z	=	1.96

Sampling Error	=	15.93		
95% Confidence Interval	=	2308.9	to	2340.8
Percentage of Mean	=	0.69%		**Good**
Sample Size Needed	=	**10**		

Z is the number of standard deviations away from the mean corresponding to the required confidence level in a normal distribution.

Sample Size Determination Tool, Version 2.0

User Inputs	Sample Size (N) = Number of Model Runs
Constants	Sample Mean (X_s) = (1/N) ($X_1 + X_2 + X_3 \ldots + X_N$)
Outputs	Sample Standard Deviation (S_s) = $\sqrt{[(\Sigma(X-X_s)^2)/(N-1)]}$
	Sampling Error = $Z\ (S_s/\sqrt{N})$
	Confidence Level = $X_s \pm Z\ (S_s/\sqrt{N})$
	% of Sample Mean (E) = % Tolerance * X_s
	Sample Size Needed = $[(Z)^2 * (S_s)^2] / (E)^2$

EB Route 50, Irving St to Fillmore St - PM

Model Iterations

Measure of Effectiveness (MOE):	Volume
Confidence Interval:	95%
Tolerance Error:	10%
Number of Model Runs:	10

Run Number	Volume
1	2203
2	2212
3	2195
4	2201
5	2180
6	2237
7	2155
8	2223
9	2221
10	2281
11	
12	
13	
14	
15	
16	
17	
18	
19	
20	
21	
22	
23	
24	
25	
26	
27	
28	
29	
30	

Sample Size Outputs

N	=	10.0
X_s	=	2210.9
S_s	=	33.8
E	=	221.1
Z	=	1.96

Sampling Error	=	20.94		
95% Confidence Interval	=	2189.9	to	2231.8
Percentage of Mean	=	0.95%		**Good**
Sample Size Needed	=	**10**		

Z is the number of standard deviations away from the mean corresponding to the required confidence level in a normal distribution.

Sample Size Determination Tool, Version 2.0

User Inputs	Sample Size (N) = Number of Model Runs
Constants	Sample Mean (X_s) = (1/N) ($X_1 + X_2 + X_3 \ldots + X_N$)
Outputs	Sample Standard Deviation (S_s) = $\sqrt{[(\Sigma(X-X_s)^2)/(N-1)]}$
	Sampling Error = $Z\ (S_s/\sqrt{N})$
	Confidence Level = $X_s \pm Z\ (S_s/\sqrt{N})$
	% of Sample Mean (E) = % Tolerance * X_s
	Sample Size Needed = $[(Z)^2 * (S_s)^2] / (E)^2$

WB Route 50, Irving St to Glebe Rd - PM

Model Iterations

Measure of Effectiveness (MOE):	Volume
Confidence Interval:	95%
Tolerance Error:	10%
Number of Model Runs:	10

Run Number	Volume
1	3272
2	3253
3	3215
4	3255
5	3306
6	3261
7	3181
8	3268
9	3288
10	3290
11	
12	
13	
14	
15	
16	
17	
18	
19	
20	
21	
22	
23	
24	
25	
26	
27	
28	
29	
30	

Sample Size Outputs

N	=	10.0
X_s	=	3259.1
S_s	=	37.2
E	=	325.9
Z	=	1.96

Sampling Error	=	23.05		
95% Confidence Interval	=	3236.0	to	3282.1
Percentage of Mean	=	0.71%		**Good**
Sample Size Needed	=	**10**		

Z is the number of standard deviations away from the mean corresponding to the required confidence level in a normal distribution.

Sample Size Determination Tool, Version 2.0

User Inputs	Sample Size (N) = Number of Model Runs
Constants	Sample Mean (X_s) = (1/N) ($X_1 + X_2 + X_3 \ldots + X_N$)
Outputs	Sample Standard Deviation (S_s) = $\sqrt{[(\Sigma(X-X_s)^2)/(N-1)]}$
	Sampling Error = $Z\ (S_s/\sqrt{N})$
	Confidence Level = $X_s \pm Z\ (S_s/\sqrt{N})$
	% of Sample Mean (E) = % Tolerance * X_s
	Sample Size Needed = $[(Z)^2 * (S_s)^2] / (E)^2$

WB Route 50, Fillmore St to Irving St - PM

Model Iterations

Measure of Effectiveness (MOE):	Volume
Confidence Interval:	95%
Tolerance Error:	10%
Number of Model Runs:	10

Run Number	Volume
1	2987
2	2985
3	2924
4	2993
5	3014
6	2974
7	2866
8	3002
9	2998
10	2971
11	
12	
13	
14	
15	
16	
17	
18	
19	
20	
21	
22	
23	
24	
25	
26	
27	
28	
29	
30	

Sample Size Outputs

N	=	10.0
X_s	=	2971.5
S_s	=	44.3
E	=	297.1
Z	=	1.96

Sampling Error	=	27.45		
95% Confidence Interval	=	2944.0	to	2998.9
Percentage of Mean	=	0.92%		**Good**
Sample Size Needed	=	**10**		

Z is the number of standard deviations away from the mean corresponding to the required confidence level in a normal distribution.

Attachment C: Peak Hour Traffic Volume Calibration Spreadsheets

Existing AM Peak Hour							
Approach	Movement	Volume Input	Volume Throughput	Vehicles Not Served	Percent Unserved	Calibration Threshold	Meet Calibration Threshold?
Glebe Road at WB Route 50 ramps (Signalized)							
NB	NB Left	390	394	4	1%	10%	Y
	NB Through	1304	1324	20	2%	5%	Y
SB	SB Through	746	762	16	2%	10%	Y
	SB Right	118	116	-2	-2%	15%	Y
WB	WB Left	46	43	-3	-7%	20%	Y
	WB Through	8	6	-2	-25%	20%	N
	WB Right	172	166	-6	-3%	15%	Y
Glebe Road at EB Route 50 ramps (Signalized)							
NB	NB Through	1594	1619	25	2%	5%	Y
	NB Right	104	100	-4	-4%	15%	Y
SB	SB Through	668	681	13	2%	10%	Y
	SB Right	124	123	-1	-1%	15%	Y
EB	EB Left	100	103	3	3%	15%	Y
	EB Right	263	265	2	1%	15%	Y
Route 50 at Old Glebe Rd (Unsignalized)							
NB		19	20	1	5%	20%	Y
EB		3243	3370	127	4%	5%	Y
WB		1880	1900	20	1%	5%	Y
Route 50 at Jackson Street (Unsignalized)							
SB		25	25	0	0%	20%	Y
EB		3257	3385	128	4%	5%	Y
WB		1860	1866	6	0%	5%	Y
Route 50 at Irving Street (Signalized)							
NB	NB Left	87	84	-3	-3%	20%	Y
	NB Through	71	73	2	3%	20%	Y
	NB Right	38	39	1	3%	20%	Y
SB	SB Left	12	13	1	8%	20%	Y
	SB Through	24	25	1	4%	20%	Y
	SB Right	16	15	-1	-6%	20%	Y
EB	EB Left	11	12	1	9%	20%	Y
	EB Through	3197	3311	114	4%	5%	Y
	EB Right	17	20	3	18%	20%	Y
WB	WB Left	7	7	0	0%	20%	Y
	WB Through	1757	1760	3	0%	5%	Y
	WB Right	10	10	0	0%	20%	Y
Route 50 at Hudson Street (Unsignalized)							
NB		129	129	0	0%	15%	Y
EB		3247	3370	123	4%	5%	Y
WB		1770	1771	1	0%	5%	Y
Route 50 at Highland Street (Unsignalized)							
NB		61	61	0	0%	20%	Y
SB		26	26	0	0%	20%	Y
EB		3368	3500	132	4%	5%	Y
WB		1748	1746	-2	0%	5%	Y
Route 50 at Garfield Street (Unsignalized)							
NB		71	71	0	0%	20%	Y
SB		9	9	0	0%	20%	Y
EB		3413	3548	135	4%	5%	Y
WB		1738	1733	-5	0%	5%	Y

Existing AM Peak Hour							
Approach	Movement	Volume Input	Volume Throughput	Vehicles Not Served	Percent Unserved	Calibration Threshold	Meet Calibration Threshold?
Route 50 at Fenwick Street (Unsignalized)							
NB		27	27	0	0%	20%	Y
SB		3	3	0	0%	20%	Y
EB		3476	3590	114	3%	5%	Y
WB		1736	1731	-5	0%	5%	Y
Route 50 at Fillmore Street (Signalized)							
NB	NB Left	66	64	-2	-3%	20%	Y
	NB Through	53	51	-2	-4%	20%	Y
	NB Right	285	268	-17	-6%	15%	Y
SB	SB Left	32	30	-2	-6%	20%	Y
	SB Through	65	67	2	3%	20%	Y
	SB Right	39	38	-1	-3%	20%	Y
EB	EB Left	17	19	2	12%	20%	Y
	EB Through	3448	3570	122	4%	5%	Y
	EB Right	32	32	0	0%	20%	Y
WB	WB Left	93	88	-5	-5%	20%	Y
	WB Through	1631	1628	-3	0%	5%	Y
	WB Right	24	22	-2	-8%	20%	Y
Fillmore Street at North frontage road (Unsignalized)							
NB		94	91	-3	-3%	20%	Y
SB		130	132	2	2%	15%	Y
WB		28	28	0	0%	20%	Y
Fillmore Street at South frontage road (Unsignalized)							
NB		386	364	-22	-6%	10%	Y
SB		190	186	-4	-2%	15%	Y
EB		12	13	1	8%	20%	Y
WB		14	14	0	0%	20%	Y

Calibration Criteria	Signalized Turns		Unsignalized Approaches	
	% Movements Meeting Calibration Criteria	85% Criteria Met?	% Movements Meeting Calibration Criteria	85% Criteria Met?
For < 100 vph, within ± 20%	95%	Y	100%	Y
For ≥ 100 vph to < 300 vph, within ± 15%	100%	Y	100%	Y
For ≥ 300 vph to < 1000 vph, within ± 10%	100%	Y	100%	Y
For ≥ 1000 vph, within ± 5%	100%	Y	100%	Y

Existing PM Peak Hour							
Approach	Movement	Volume Input	Volume Throughput	Vehicles Not Served	Percent Unserved	Calibration Threshold	Meet Calibration Threshold?
Glebe Road at WB Route 50 ramps (Signalized)							
NB	NB Left	333	325	-8	-2%	10%	Y
	NB Through	940	937	-3	0%	10%	Y
SB	SB Through	1293	1313	20	2%	5%	Y
	SB Right	149	148	-1	-1%	15%	Y
WB	WB Left	106	103	-3	-3%	15%	Y
	WB Through	4	4	0	0%	20%	Y
	WB Right	107	108	1	1%	15%	Y
Glebe Road at EB Route 50 ramps (Signalized)							
NB	NB Through	1145	1141	-4	0%	5%	Y
	NB Right	82	80	-2	-2%	20%	Y
SB	SB Through	1188	1195	7	1%	5%	Y
	SB Right	211	216	5	2%	15%	Y
EB	EB Left	128	127	-1	-1%	15%	Y
	EB Right	241	246	5	2%	15%	Y
Route 50 at Old Glebe Rd (Unsignalized)							
NB		18	18	0	0%	20%	Y
EB		2352	2355	3	0%	5%	Y
WB		3336	3310	-26	-1%	5%	Y
Route 50 at Jackson Street (Unsignalized)							
SB		54	55	1	2%	20%	Y
EB		2358	2362	4	0%	5%	Y
WB		3295	3260	-35	-1%	5%	Y
Route 50 at Irving Street (Signalized)							
NB	NB Left	134	137	3	2%	15%	Y
	NB Through	37	34	-3	-8%	20%	Y
	NB Right	9	9	0	0%	20%	Y
SB	SB Left	17	20	3	18%	20%	Y
	SB Through	58	57	-1	-2%	20%	Y
	SB Right	62	60	-2	-3%	20%	Y
EB	EB Left	18	19	1	6%	20%	Y
	EB Through	2188	2182	-6	0%	5%	Y
	EB Right	123	121	-2	-2%	15%	Y
WB	WB Left	12	11	-1	-8%	20%	Y
	WB Through	3099	3064	-35	-1%	5%	Y
	WB Right	8	7	-1	-13%	20%	Y
Route 50 at Hudson Street (Unsignalized)							
NB		26	26	0	0%	20%	Y
EB		2214	2211	-3	0%	5%	Y
WB		3115	3078	-37	-1%	5%	Y
Route 50 at Highland Street (Unsignalized)							
NB		5	5	0	0%	20%	Y
SB		70	70	0	0%	20%	Y
EB		2213	2217	4	0%	5%	Y
WB		3056	3021	-35	-1%	5%	Y
Route 50 at Garfield Street (Unsignalized)							
NB		9	9	0	0%	20%	Y
SB		48	48	0	0%	20%	Y
EB		2196	2218	22	1%	5%	Y
WB		3015	2981	-34	-1%	5%	Y

Existing PM Peak Hour							
Approach	Movement	Volume Input	Volume Throughput	Vehicles Not Served	Percent Unserved	Calibration Threshold	Meet Calibration Threshold?
Route 50 at Fenwick Street (Unsignalized)							
NB		9	9	0	0%	20%	Y
SB		4	4	0	0%	20%	Y
EB		2195	2153	-42	-2%	5%	Y
WB		3011	2979	-32	-1%	5%	Y
Route 50 at Fillmore Street (Signalized)							
NB	NB Left	139	132	-7	-5%	15%	Y
	NB Through	64	59	-5	-8%	20%	Y
	NB Right	184	176	-8	-4%	15%	Y
SB	SB Left	20	20	0	0%	20%	Y
	SB Through	138	140	2	1%	15%	Y
	SB Right	69	67	-2	-3%	20%	Y
EB	EB Left	57	58	1	2%	20%	Y
	EB Through	2073	2080	7	0%	5%	Y
	EB Right	55	53	-2	-4%	20%	Y
WB	WB Left	348	336	-12	-3%	10%	Y
	WB Through	2803	2781	-22	-1%	5%	Y
	WB Right	8	9	1	13%	20%	Y
Fillmore Street at North frontage road (Unsignalized)							
NB		129	127	-2	-2%	15%	Y
SB		218	219	1	0%	15%	Y
WB		26	26	0	0%	20%	Y
Fillmore Street at South frontage road (Unsignalized)							
NB		369	350	-19	-5%	10%	Y
SB		541	529	-12	-2%	10%	Y
EB		16	15	-1	-6%	20%	Y
WB		29	27	-2	-7%	20%	Y

Calibration Criteria	Signalized Turns		Unsignalized Approaches	
	% Movements Meeting Calibration Criteria	85% Criteria Met?	% Movements Meeting Calibration Criteria	85% Criteria Met?
For < 100 vph, within ± 20%	100%	Y	100%	Y
For ≥ 100 vph to < 300 vph, within ± 15%	100%	Y	100%	Y
For ≥ 300 vph to < 1000 vph, within ± 10%	100%	Y	100%	Y
For ≥ 1000 vph, within ± 5%	100%	Y	100%	Y

Appendix F – Assessment of Four-Lane Section with Turn Lanes

MEMORANDUM

To:	Bobby Mangalath VDOT NOVA District
From:	WRA
Subject:	Assessment of Four-Lanes with a Median and Left-Turn Lanes along Route 50
Date:	July 29, 2020

1. Introduction

The Virginia Department of Transportation (VDOT) has initiated this STARS study to evaluate operational and safety conditions of Arlington Boulevard (US Route 50) from Route 120 (Glebe Road) to Route 6622 (Fillmore Street) and identify improvements that can be incorporated into the Six-Year Improvement Plan (SYIP).

The purpose of this memorandum is to evaluate an alternative that would provide a four-lane section of Route 50 with a raised median and dedicated left-turn lanes at Irving Street and Fillmore Street. This alternative would not require the widening of Route 50 and would repurpose the existing inside travel lanes to provide space for the median and left-turn lanes. This evaluation includes a review of traffic volumes along Route 50 compared to available roadway capacity as well as a VISSIM microsimulation analysis to assess the feasibility and operations of a roadway typical section that would include four through lanes plus turn lanes along Route 50 within the study area.

2. Four-Lane with Medians and Turn Lanes Concept

An alternative with two travel lanes in each direction of Route 50, a raised median, and dedicated left-turn lanes at Irving Street and Fillmore Street was considered to address the operational and safety issues identified along Route 50. This alternative would repurpose the existing innermost travel lanes along Route 50 as a raised median with left-turn lanes and would not require widening of Route 50. Route 50 is currently six lanes with three lanes in each direction; therefore, in order to perform an operational analysis, assumptions had to be made regarding how the three existing lanes per direction would be reduced to two lanes per direction to create available width for a center raised median and turn lanes. For the purposes of the analysis, it was assumed that a lane reduction from three to two lanes would occur along eastbound Route 50 in the vicinity of Old Glebe Road. Eastbound Route 50 would widen back to three through lanes by adding a lane approaching Fillmore Street where there is currently an existing median, left-turn lane, and three eastbound through lanes. Along westbound Route 50, the existing leftmost lane along Route 50 would be dropped onto Fillmore Street as the left-turn lane and two through lanes would be carried through the Fillmore Street intersection. Westbound Route 50 would widen back to three through lanes by adding a lane between Jackson Street and Old Glebe Road. Dedicated eastbound and westbound left-turn lanes to Irving Street would be provided. The eastbound left-turn lane to Fillmore Street would be extended to 400 feet of storage and the westbound left-turn lane to Fillmore Street would be extended to 1,000 feet. A median would be installed on Route 50 separating both directions of travel and would prohibit left-turn movements to and from unsignalized side streets.

3. Route 50 Traffic Volumes and Operational Capacity

The average daily traffic volume (ADT) on Route 50 within the study area is approximately 64,800 vehicles per day and has the highest volumes along Route 50 from Route 7 in Fairfax County to the Washington, D.C. line. Reducing the number of through lanes on Route 50 from six lanes to four lanes within the section of Route 50 from Glebe Road to Fillmore Street would reduce capacity and create travel delays, especially at the signalized intersections along the corridor. In addition, Route 50 to the east and west of the study area consists of six travel lanes and reducing the number of travel lanes in this portion of the corridor would create a bottleneck in each direction of Route 50. Traffic demand exceeding the capacity of this four-lane segment of Route 50 (i.e., unmet demand) would likely take alternate travel routes including Glebe Road and neighborhood streets to avoid delays along Route 50. In addition, lane continuity throughout the Route 50 corridor would suffer as a result of a through travel lane being dropped along both eastbound and westbound Route 50 entering the study area east of Glebe Road and at Fillmore Street. This would cause motorists to make last minute lane changes and the potential for safety and operational issues where the lanes are reduced from three lanes to two lanes.

Based on field-collected data along Route 50 at Highland Street on May 29, 2019, all three travel lanes are being utilized in each direction during the peak hours. **Table 1** shows the lane utilization percentages in each peak direction. During the AM peak hour, the leftmost travel lane of Route 50 in the eastbound direction (peak direction) carries 32% of the traffic among all three eastbound travel lanes. During the PM peak hour, the leftmost travel lane in the westbound direction (peak direction) carries 27% of the traffic among all three westbound travel lanes. The traffic utilization is slightly lower in the leftmost travel lanes during the peak hours due to vehicles avoiding downstream vehicles who are stopped in the leftmost through lanes to try to make left-turn movements onto Irving Street or side streets; however, traffic volumes are relatively evenly distributed between all three travel lanes indicating that the leftmost travel lane is not solely used as a de facto left-turn lane for intersections along the Route 50 corridor without turn lanes.

Table 1: Route 50 Lane Utilization

Peak Hour	Travel Direction	Traffic Volume (Percentage)			
		Left	Middle	Right	Total
AM Peak	Eastbound	1,118 (32%)	1,180 (34%)	1,167 (34%)	3,495 (100%)
PM Peak	Westbound	814 (27%)	1,184 (39%)	1,024 (34%)	3,022 (100%)

Based on the average daily traffic volume (ADT) of 64,800 vehicles per day on Route 50 within the study corridor, the posted speed limit of 45 miles per hour, a K-factor of 0.08 (the estimate of the portion of traffic volume traveling during the peak hour or design hour), and a D-factor of 0.58 (the estimate of the portion of traffic volume traveling in the peak direction during the peak hour) and criteria established in Exhibit 16-16 of the *Highway Capacity Manual Version 6.0* (HCM) (see **Figure 1**) which identifies generalized daily service volumes for urban street facilities, the traffic volumes along Route 50 exceed the ADT volume threshold for a Level of Service (LOS) E with the current six-lane configuration indicating LOS

F operations during peak hours. Reducing the number of lanes to four would also result in LOS F operations during peak hours.

Figure 1: Highway Capacity Manual Version 6.0 - Exhibit 16-16

K-Factor	D-Factor	Daily Service Volume by Lanes, LOS, and Speed (1,000 veh/day)											
		Two-Lane Streets				Four-Lane Streets				Six-Lane Streets			
		LOS B	LOS C	LOS D	LOS E	LOS B	LOS C	LOS D	LOS E	LOS B	LOS C	LOS D	LOS E
Posted Speed = 30 mi/h													
0.09	0.55	NA	1.7	11.8	17.8	NA	2.2	24.7	35.8	NA	2.6	38.7	54.0
	0.60	NA	1.6	10.8	16.4	NA	2.0	22.7	32.8	NA	2.4	35.6	49.5
0.10	0.55	NA	1.6	10.7	16.1	NA	2.0	22.3	32.2	NA	2.4	34.9	48.6
	0.60	NA	1.4	9.8	14.7	NA	1.8	20.4	29.5	NA	2.2	32.0	44.5
0.11	0.55	NA	1.4	9.7	14.6	NA	1.8	20.3	29.3	NA	2.1	31.7	44.1
	0.60	NA	1.3	8.9	13.4	NA	1.7	18.6	26.9	NA	2.0	29.1	40.5
Posted Speed = 45 mi/h													
0.09	0.55	NA	7.7	15.9	18.3	NA	16.5	33.6	36.8	NA	25.4	51.7	55.3
	0.60	NA	7.1	14.5	16.8	NA	15.1	30.8	33.7	NA	23.4	47.4	50.7
0.10	0.55	NA	7.0	14.3	16.5	NA	14.9	30.2	33.1	NA	23.0	46.5	49.7
	0.60	NA	6.4	13.1	15.1	NA	13.6	27.7	30.3	NA	21.0	42.7	45.6
0.11	0.55	NA	6.3	13.0	15.0	NA	13.5	27.5	30.1	NA	20.9	42.3	45.2
	0.60	NA	5.8	11.9	13.8	NA	12.4	25.2	27.6	NA	19.1	38.8	41.5

Notes: NA = not applicable; LOS cannot be achieved with the stated assumptions.
General assumptions include no roundabouts or all-way STOP-controlled intersections along the facility; coordinated, semiactuated traffic signals; Arrival Type 4; 120-s cycle time; protected left-turn phases; 0.45 weighted average *g/C* ratio; exclusive left-turn lanes with adequate queue storage provided at traffic signals; no exclusive right-turn lanes provided; no restrictive median; 2-mi facility length; 10% of traffic turns left and 10% turns right at each traffic signal; peak hour factor = 0.92; and base saturation flow rate = 1,900 pc/h/ln.
Additional assumptions for 30-mi/h facilities: signal spacing = 1,050 ft and 20 access points/mi.
Additional assumptions for 45-mi/h facilities: signal spacing = 1,500 ft and 10 access points/mi.

4. Traffic Operations Analysis Summary

Existing conditions, 2030 No Build conditions, and 2030 Build conditions with the four-lane alternative with a raised median and turn lanes were analyzed for the AM and PM peak hours using VISSIM microsimulation software consistent with the other alternatives under consideration for the Route 50 corridor. The results of the VISSIM microsimulation analyses are discussed below and the measures of effectiveness used to document the operation of the four-lane alternative include volume throughput, intersection operations at the signalized Irving Street and Fillmore Street intersections, and corridor travel time along Route 50.

Traffic Volume Throughput

Traffic volume throughput can be used to evaluate the amount of unmet demand along a roadway or the amount of traffic that is not able to be accommodated by the roadway network compared to the forecasted traffic volumes. Traffic volume throughput was evaluated along both eastbound and westbound Route 50 in the middle of the study corridor between Highland Street and Garfield Street. **Figure 2** shows the existing, No Build, and Build conditions with the four-lane alternative peak hour traffic

volume demand, throughput, and percent unserved vehicles (or unmet demand) for both directions of Route 50 during the AM and PM peak hours.

Figure 2: Route 50 Volume Throughput

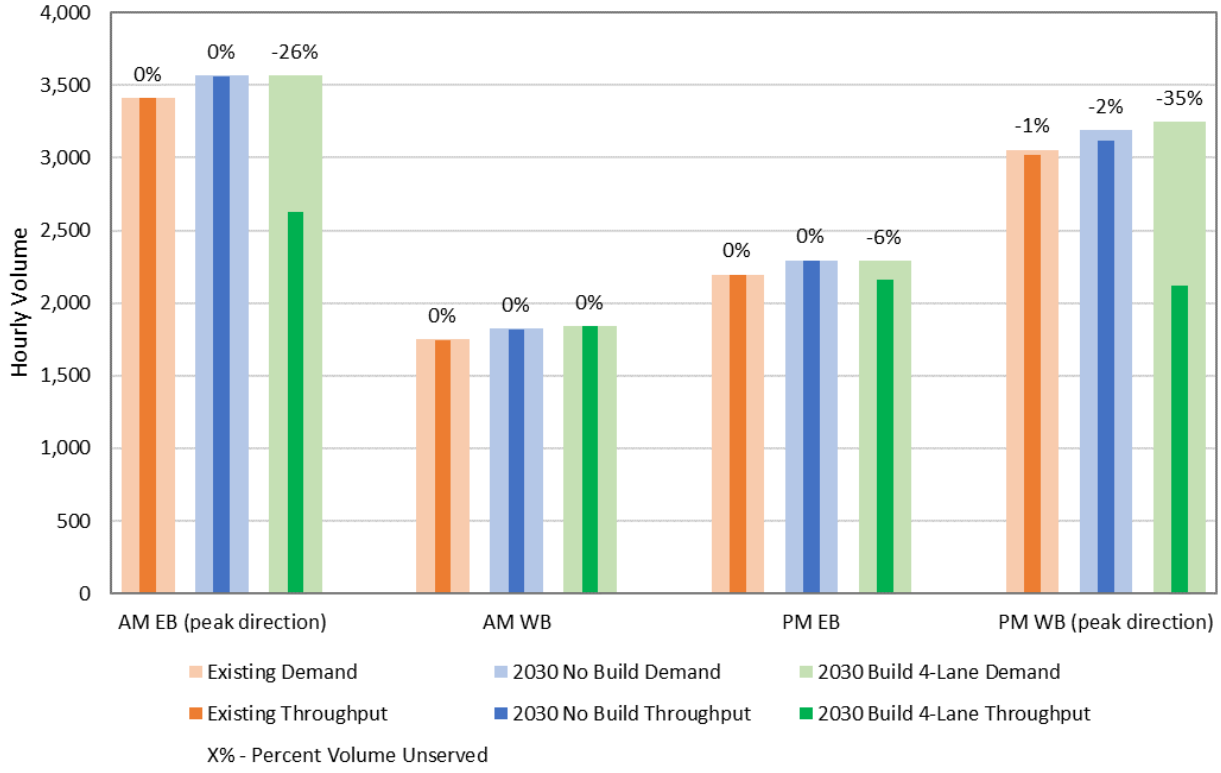

Under existing and No Build conditions, all of the traffic demand is met on eastbound Route 50 during the AM and PM peak hours and westbound Route 50 during the AM peak hour. In the westbound direction during the PM peak hour, existing conditions result in 1% (35 vehicles) unmet demand and No Build conditions result in 2% (76 vehicles) unmet demand.

With the four-lane with turn lanes Build alternative, 26% (942 vehicles) of traffic demand is unmet during the AM peak hour on eastbound Route 50 in the peak direction. During the PM peak hour, westbound Route 50 in the peak direction experiences 35% (1,128 vehicles) unmet demand. The AM peak hour westbound direction (off-peak direction) has no unmet demand and the PM peak hour eastbound direction (off-peak direction) has 6% (130 vehicles) unmet demand. As discussed above in **Section 3**, the unmet demand is due to the reduced capacity entering the study corridor as a result of the reduction from three travel lanes to two travel lanes in each direction as well as the reduction in capacity throughout the corridor due to the removal of one of the travel lanes in each direction.

It is likely that a portion of the 942 vehicles of unmet demand along eastbound Route 50 in the AM peak hour and the 1,128 vehicles of unmet demand along westbound Route 50 in the PM peak hour would take alternate travel routes to avoid the congestion on Route 50. Alternate travel routes include Glebe Road, Washington Boulevard, and neighborhood streets such as 2nd Street.

Intersection Operations

The Irving Street and Fillmore Street signalized intersections were evaluated based on a review of vehicle delay (seconds/vehicle) by movement and overall intersection delay (seconds/vehicle). In accordance with the TOSAM, level of service (LOS) is not provided as a measure of effectiveness; however, metrics such as "severe congestion" and "light traffic conditions" corresponding to LOS are used to depict congestion levels. Operational conditions for the intersections are color-coded to reflect various congestion levels based on delay thresholds established in the Highway Capacity Manual 2010 (HCM). **Table 2** summarizes the thresholds for signalized intersections.

Table 2: Intersection Measures of Effectiveness

Congestion Level	Signalized Intersections
	Average Delay (sec/veh)
Light Traffic	≤35
Moderate Traffic	>35 - 55
Heavy Congestion	>55 – 80
Severe Congestion	>80

Table 3 depicts intersection delays by movement and overall intersection at the signalized Irving Street and Fillmore Street intersections.

At Route 50 at Irving Street, the overall intersection delays increase during the AM peak hour from an average of 63 seconds to an average of 77 seconds and increase during the PM peak from an average of 21 seconds to an average of 95 seconds when comparing No Build conditions to Build conditions with four lanes along Route 50. During the PM peak, the level of congestion degrades from light traffic conditions under No Build conditions to severe congestion under Build conditions. The 1.2 minute increase in overall intersection delay during the PM peak hour is primarily due to the significant increase in delay for the eastbound through movement from 26 seconds under No Build conditions to 153 seconds under Build conditions with four lanes along Route 50.

At Route 50 at Fillmore Street, the overall intersection delay remains at the same moderate level of traffic during the AM peak hour with a seven second decrease in delay from 42 seconds under No Build conditions to 35 seconds under Build conditions. The decrease in overall intersection delay is primarily due to the decrease in delays on the northbound approach where individual movement delays decrease by 65 to 89 seconds. Northbound right-turning vehicles from Fillmore Street onto Route 50 experience lower delays under the Build alternative due to the decreased eastbound Route 50 throughput and northbound through and left-turning vehicles are not trapped in the long delays from the northbound right-turning vehicles. During the PM peak hour, the overall intersection delay remains at a severe level of congestion with delays that increase from an average of 81 seconds to an average of 236 seconds when comparing No Build conditions to Build conditions with four lanes along Route 50. The 2.6 minute increase in overall intersection delay during the PM peak hour is primarily due to the significant increase in delay for the westbound through movement from 50 seconds under No Build conditions to 433 seconds under

Build conditions with four lanes along Route 50 that can be attributed to the lane reduction that occurs along westbound Route 50 approaching the Fillmore Street intersection.

Table 3: Signalized Intersection Delay Summary

Intersection	Movement	Average Delay (seconds)					
		Existing		No Build		Build 4-Lane Alt	
		AM Peak Hour	PM Peak Hour	AM Peak Hour	PM Peak Hour	AM Peak Hour	PM Peak Hour
Route 50 at Irving Street	NB Left	127	86	156	92	105	114
	NB Through	128	78	154	86	107	115
	NB Right	105	79	137	72	86	116
	SB Left	82	61	87	65	92	58
	SB Through	79	58	78	57	78	61
	SB Right	35	37	45	41	43	55
	EB Left	112	170	145	221	98	89
	EB Through	65	17	91	26	128	153
	EB Right	14	8	14	10	17	20
	WB Left	65	69	55	60	123	86
	WB Through	2	10	2	11	7	47
	WB Right	3	11	2	12	3	41
	Overall	**46**	**16**	**63**	**21**	**77**	**95**
Route 50 at Fillmore Street	NB Left	177	299	251	491	186	528
	NB Through	174	293	252	490	182	524
	NB Right	118	210	193	407	104	442
	SB Left	88	65	98	70	93	66
	SB Through	87	65	96	69	89	67
	SB Right	14	13	14	18	19	21
	EB Left	81	78	78	79	81	77
	EB Through	29	36	29	48	28	40
	EB Right	31	35	34	47	28	39
	WB Left	193	156	273	193	116	384
	WB Through	13	37	13	50	17	433
	WB Right	10	33	13	43	17	440
	Overall	**35**	**58**	**42**	**81**	**35**	**236**

It should be noted that while delays decrease for certain movements, delays for the eastbound and westbound Route 50 through movements at Irving Street and the westbound Route 50 through movement at Fillmore Street increase which is a result of the reduction in the number of travel lanes along Route 50. At Irving Street, the eastbound through movement level of congestion degrades from light traffic conditions during the PM peak hour under No Build conditions to severe congestion under Build conditions. At Irving Street, the westbound through movement level of congestion degrades from light

traffic conditions during the PM peak hour under No Build conditions to moderate traffic conditions under Build conditions. At Fillmore Street, the westbound through movement level of congestion remains the same during the AM peak hour between No Build and Build conditions but degrades during the PM peak hour from moderate traffic conditions under No Build conditions to severe congestion under Build conditions.

Corridor Travel Time

Figures 3 and 4 summarize the cumulative travel times for eastbound and westbound Route 50, respectively, during the AM peak hour under existing, No Build, and Build conditions within the study area limits. In the eastbound direction (the peak direction), the overall travel time increases 0.7 (21%) minutes under Build conditions with the majority of the travel time increase occurring west of Irving Street due to the bottleneck created at the lane reduction from three lanes to two lanes located west of Irving Street. In the westbound (off-peak direction), the overall travel time increases 0.2 (10%) minutes under Build conditions.

It should be noted that although the travel time results include a 21% increase in the AM peak hour eastbound direction, that is only the travel time increase captured within the limits of the study area. Eastbound Route 50 queues extend outside the western limit of the study area with additional travel time increases expected for eastbound vehicles. These increases in travel time extend upstream beyond the study area as a result of the lane reduction near Old Glebe Road creating a bottleneck and limiting capacity.

Figure 3: Route 50 Travel Time – AM Peak Hour, Eastbound (Peak Direction)

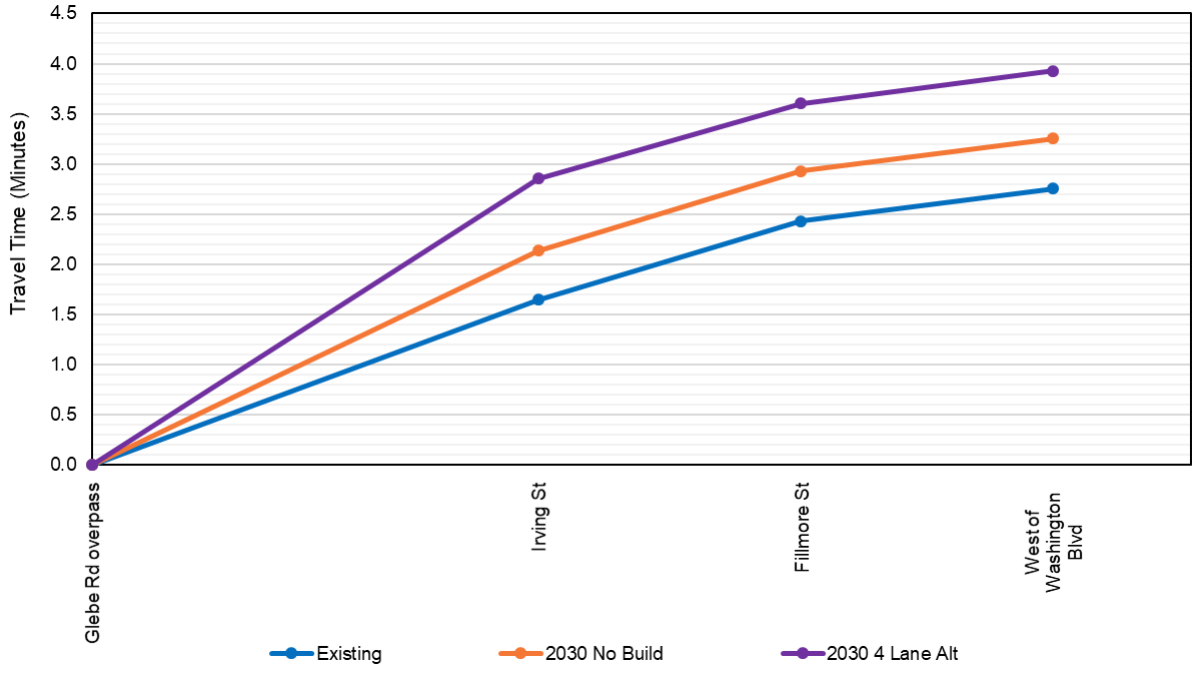

Figure 4: Route 50 Travel Time – AM Peak Hour, Westbound

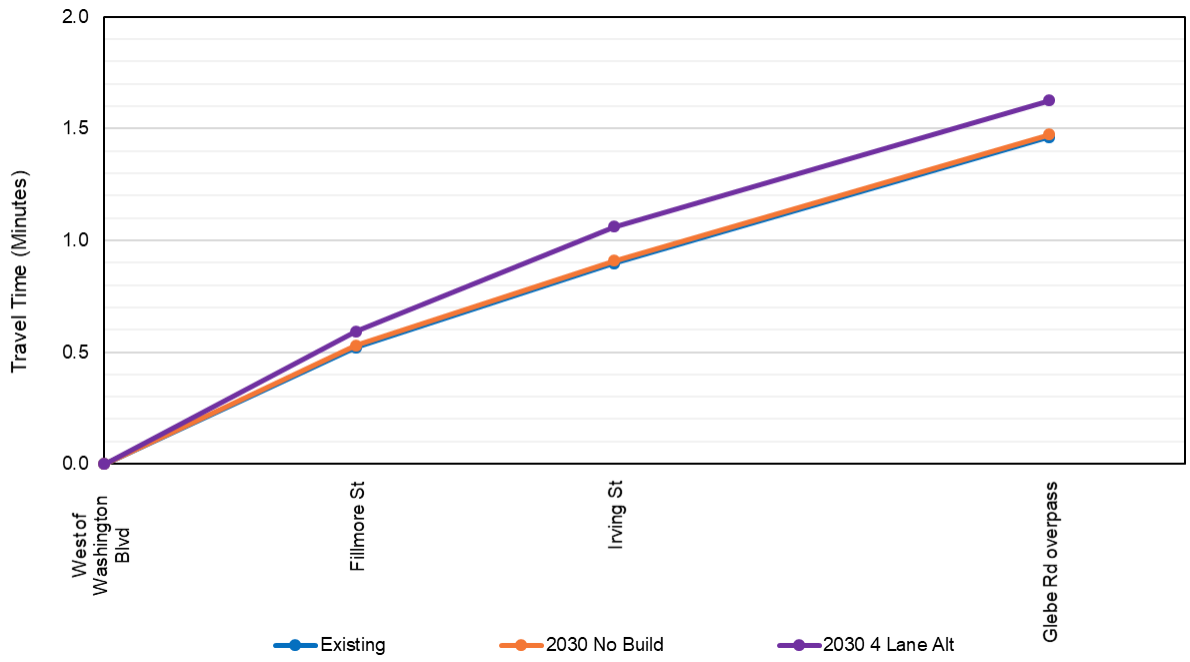

Figures 4 and 5 summarize the cumulative travel times for eastbound and westbound Route 50, respectively, during the PM peak hour under existing, No Build, and Build conditions within the study area limits. In the eastbound direction (the off-peak direction), the overall travel time increased 2.2 minutes (90%) under Build conditions with the travel time increases occurring west of Irving Street due to the bottleneck created at the lane reduction from three lanes to two lanes located west of Irving Street. In the westbound (peak direction), the overall travel time increased 2.0 minutes (99%) under Build conditions with the largest travel time increase occurring east of Fillmore Street due to the bottleneck created at the lane drop and reduction in through lanes from three lanes to two lanes approaching Fillmore Street.

It should be noted that although the travel time results include a 99% increase in the PM peak hour westbound direction and a 90% increase in the PM off-peak eastbound direction, that is only the travel time increase captured within the study area. Westbound queueing extends outside the eastern limit of the study area and eastbound queueing extends outside the western limit of the study area with additional travel time increases expected for westbound and eastbound vehicles approaching the study area. These increases in travel time extend upstream beyond the study area as a result of the westbound lane drop at Fillmore Street and the eastbound lane reduction near Old Glebe Road creating bottlenecks and limiting capacity.

Figure 5: Route 50 Travel Time – PM Peak Hour, Eastbound

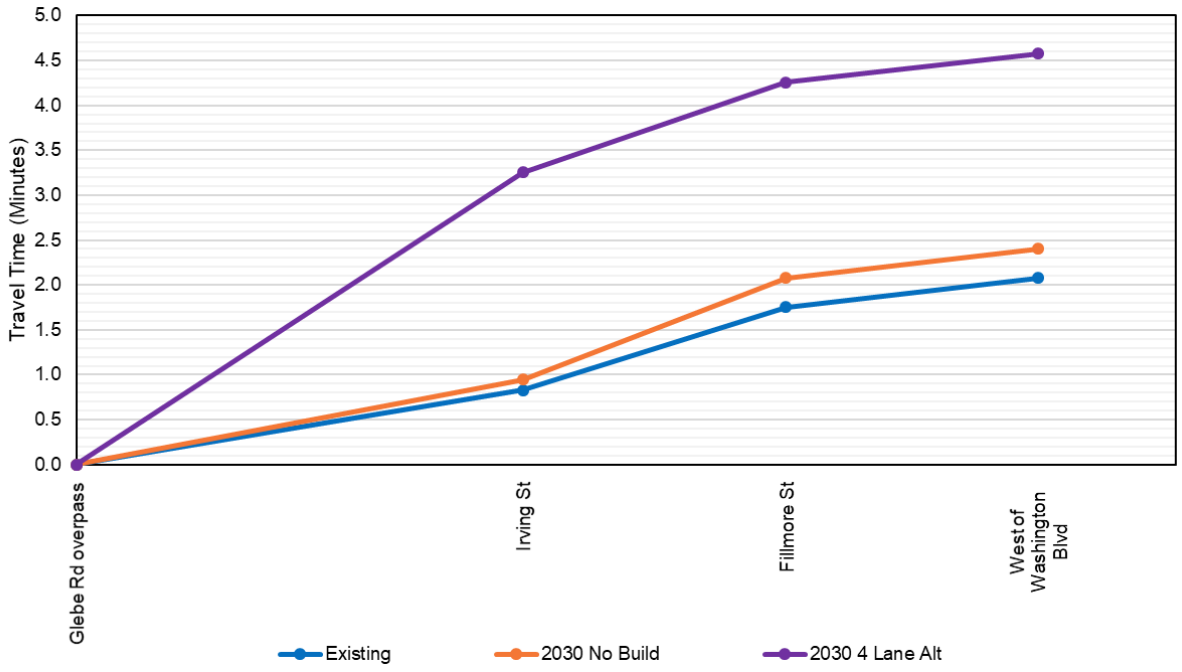

Figure 6: Route 50 Travel Time – PM Peak Hour, Westbound (Peak Direction)

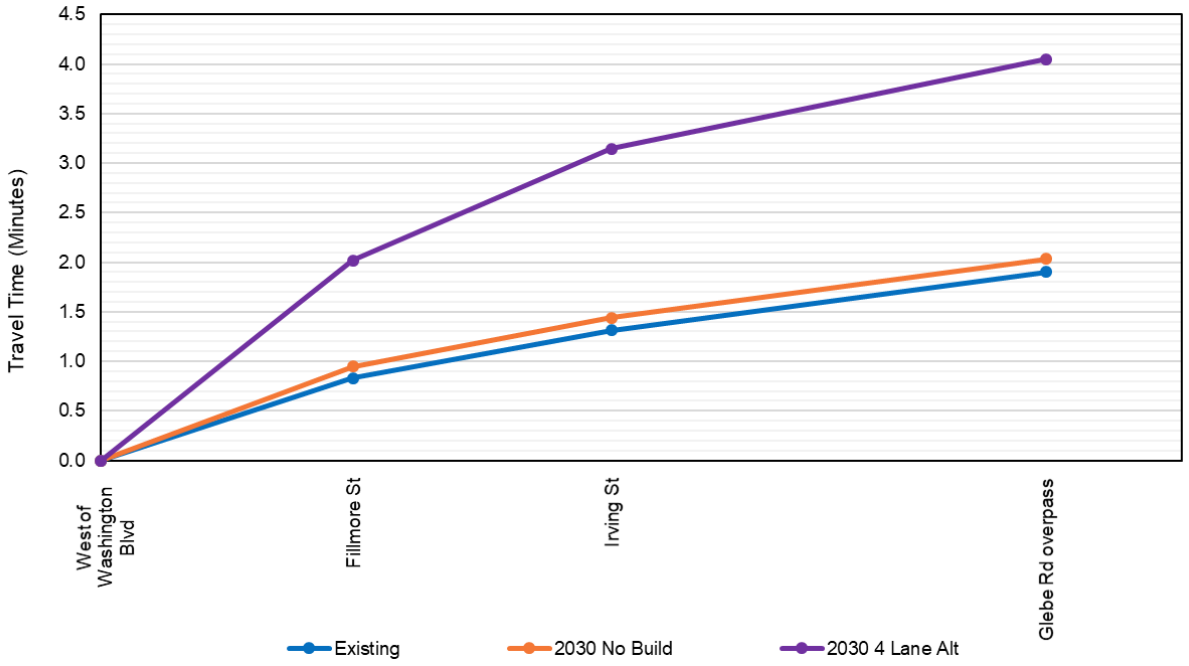

5. Summary of Findings

Based on a review of traffic volumes and the capacity and operational analysis results discussed above, reducing the number of lanes on Route 50 from three lanes to two lanes would cause capacity and operational problems along Route 50 within and approaching the study area. A four-lane section on Route 50 would reduce capacity that would result in over 900 eastbound vehicles exceeding the capacity along Route 50 during the AM peak hour and over 1,100 westbound vehicles exceeding the capacity along Route 50 during the PM peak hour. A portion of these vehicles would be expected to find alternative travel routes other than Route 50 including adjacent neighborhood streets which has been noted as a concern by the adjacent communities during the public engagement activities. The reduction in capacity would also increase delays and travel times on eastbound and westbound Route 50. Based on a review of the Highway Capacity Manual guidance regarding daily service volume thresholds, the Route 50 corridor would be expected to operate with a failing level of service with only four through lanes of capacity. In addition, lane continuity throughout the corridor would suffer as a result of a through travel lane being dropped along both eastbound and westbound Route 50 entering the study area east of Glebe Road and at Fillmore Street. This would cause motorists to make last minute lane changes and potentially cause safety and operational issues where the lanes are reduced from three lanes to two lanes.

In summary, although a four-lane section with a raised median on Route 50 would eliminate the need for any widening along Route 50 within the study area and allow for the installation of left-turn lanes, it was not considered in more detail based on a review of traffic volumes and the capacity and operational analysis results. Therefore, an alternative with a four-lane section with a raised median and turn lanes was not carried forward for further conceptual design or analysis.

Appendix G – Intersection Operations Analysis

Existing AM Peak Hour									
Approach	Approach Delay (sec/veh)	Movement	Volume Input	Volume Throughput	Vehicles Not Served	Percent Unserved	Delay (sec/veh)	Max Queue Length (feet)	Intersection Delay (sec/veh)
Glebe Road at WB Route 50 ramps (Signalized)									
NB	6.1	NB Left	390	394			18.2	276	16.3
		NB Through	1304	1324			2.6	270	
SB	21.4	SB Through	746	759			23.8	474	
		SB Right	118	115	-3	-3%	5.4	42	
WB	77.3	WB Left	46	43	-3	-7%	69.0	350	
		WB Through	8	6	-2	-25%	73.3	350	
		WB Right	172	166	-6	-3%	79.6	350	
Glebe Road at EB Route 50 ramps (Signalized)									
NB	16.7	NB Through	1594	1601			16.9	854	21.7
		NB Right	104	99	-5	-5%	13.5	854	
SB	2.7	SB Through	668	681			2.9	130	
		SB Right	124	123	-1	-1%	1.7	130	
EB	86.2	EB Left	100	103			71.0	223	
		EB Right	263	264			92.2	1005	
Route 50 at Old Glebe Rd (Unsignalized)									
NB	62.7	NB Left	4	4			145.9	69	14.8
		NB Right	15	16			41.9	68	
EB	22.6	EB Through	3242	3369			22.6	2102	
		EB Right	1	1			11.6	2102	
WB	0.4	WB Left	0	0			0.0	3	
		WB Through	1880	1900			0.4	2	
Route 50 at Jackson Street (Unsignalized)									
SB	11.5	SB Left	1	1			78.2	52	14.2
		SB Right	24	24			8.7	58	
EB	22.0	EB Left	33	31	-2	-6%	66.4	664	
		EB Through	3224	3354			21.5	654	
WB	0.3	WB Through	1856	1863			0.3	19	
		WB Right	4	3	-1	-25%	1.2	19	
Route 50 at Irving Street (Signalized)									
NB	123.3	NB Left	87	84	-3	-3%	127.5	635	46.1
		NB Through	71	73			128.3	635	
		NB Right	38	39			104.9	635	
SB	67.4	SB Left	12	13			82.4	151	
		SB Through	24	25			79.3	151	
		SB Right	16	15	-1	-6%	34.7	151	
EB	64.4	EB Left	11	12			111.5	3357	
		EB Through	3197	3311			64.6	3357	
		EB Right	17	20			13.6	0	
WB	2.6	WB Left	7	7			65.2	252	
		WB Through	1757	1760			2.3	252	
		WB Right	10	10			3.0	219	
Route 50 at Hudson Street (Unsignalized)									
NB	111.9	NB Left	4	4			121.8	387	5.7
		NB Right	125	124	-1	-1%	111.6	391	
EB	4.5	EB Through	3243	3364			4.5	286	
		EB Right	4	6			2.4	286	
WB	0.4	WB Left	0	0			0.0	38	
		WB Through	1770	1771			0.4	36	

Existing AM Peak Hour									
Approach	Approach Delay (sec/veh)	Movement	Volume Input	Volume Throughput	Vehicles Not Served	Percent Unserved	Delay (sec/veh)	Max Queue Length (feet)	Intersection Delay (sec/veh)
Route 50 at Highland Street (Unsignalized)									
NB	44.4	NB Left	1	1			64.7	122	4.5
		NB Through	0	0			0.0	0	
		NB Right	60	60			44.1	129	
SB	7.5	SB Left	0	0			0.0	36	
		SB Through	0	0			0.0	0	
		SB Right	26	26			7.5	47	
EB	5.8	EB Left	15	15			44.2	318	
		EB Through	3353	3485			5.6	309	
		EB Right	0	0			0.0	331	
WB	0.4	WB Left	0	0			0.0	47	
		WB Through	1743	1741	-2		0.4	54	
		WB Right	5	5			1.6	54	
Route 50 at Garfield Street (Unsignalized)									
NB	105.8	NB Left	2	2			100.6	228	4.6
		NB Through	0	0			0.0	0	
		NB Right	69	69			106.0	238	
SB	7.2	SB Left	0	0			0.0	28	
		SB Through	0	0			0.0	0	
		SB Right	9	9			7.2	43	
EB	4.7	EB Left	3	3			23.9	320	
		EB Through	3407	3541			4.7	312	
		EB Right	3	4			7.4	312	
WB	0.3	WB Left	0	0			0.0	24	
		WB Through	1737	1732	-5		0.3	23	
		WB Right	1	1			1.0	22	
Route 50 at Fenwick Street (Unsignalized)									
NB	53.1	NB Left	1	0	-1	-100%	68.9	68	6.5
		NB Through	0	0			0.0	0	
		NB Right	26	27			53.1	72	
SB	9.3	SB Left	0	0			0.0	28	
		SB Through	0	0			0.0	0	
		SB Right	3	3			9.3	39	
EB	9.0	EB Left	1	1			40.2	348	
		EB Through	3471	3584			9.0	340	
		EB Right	4	5			8.8	340	
WB	0.5	WB Left	0	0			0.0	0	
		WB Through	1734	1728	-6		0.5	0	
		WB Right	2	3			-0.3	0	

Existing AM Peak Hour									
Approach	Approach Delay (sec/veh)	Movement	Volume Input	Volume Throughput	Vehicles Not Served	Percent Unserved	Delay (sec/veh)	Max Queue Length (feet)	Intersection Delay (sec/veh)
Route 50 at Fillmore Street (Signalized)									
NB	135.4	NB Left	66	64	-2	-3%	176.5	1162	34.6
		NB Through	53	51	-2	-4%	174.3	1162	
		NB Right	285	268	-17	-6%	118.2	1064	
SB	66.8	SB Left	32	30	-2	-6%	88.4	345	
		SB Through	65	67			87.0	345	
		SB Right	39	38	-1	-3%	14.0	147	
EB	28.9	EB Left	17	19			80.6	90	
		EB Through	3448	3570			28.6	1451	
		EB Right	32	32			31.4	1455	
WB	21.9	WB Left	93	88	-5	-5%	193.0	294	
		WB Through	1631	1627	-4		12.8	411	
		WB Right	24	22	-2	-8%	10.1	411	
Fillmore Street at North frontage road (Unsignalized)									
NB	0.5	NB Through	89	86	-3	-3%	0.6	58	32.8
		NB Right	5	5			-0.3	58	
SB	59.8	SB Left	4	4			68.5	266	
		SB Through	126	126			59.6	256	
WB	12.4	WB Left	10	10			20.2	58	
		WB Right	18	18			8.1	68	
Fillmore Street at South frontage road (Unsignalized)									
NB	128.4	NB Left	0	0			0.0	1066	83.0
		NB Through	386	362	-24	-6%	128.4	1058	
		NB Right	0	0			147.7	955	
SB	0.7	SB Left	10	9	-1	-10%	3.5	94	
		SB Through	176	173	-3	-2%	0.6	83	
		SB Right	4	4			-0.3	83	
EB	65.6	EB Left	9	10			73.2	85	
		EB Through	2	2			48.9	82	
		EB Right	1	1			22.9	93	
WB	16.6	WB Left	3	3			13.4	42	
		WB Through	2	1	-1	-50%	12.1	40	
		WB Right	9	10			18.1	52	

Existing PM Peak Hour									
Approach	Approach Delay (sec/veh)	Movement	Volume Input	Volume Throughput	Vehicles Not Served	Percent Unserved	Delay (sec/veh)	Max Queue Length (feet)	Intersection Delay (sec/veh)
Glebe Road at WB Route 50 ramps (Signalized)									
NB	10.5	NB Left	333	325	-8	-2%	32.8	273	20.5
		NB Through	940	937	-3		2.8	273	
SB	23.1	SB Through	1293	1303			24.5	838	
		SB Right	149	146	-3	-2%	10.9	53	
WB	61.9	WB Left	106	103	-3	-3%	63.8	285	
		WB Through	4	4			68.2	285	
		WB Right	107	108			59.8	285	
Glebe Road at EB Route 50 ramps (Signalized)									
NB	13.3	NB Through	1145	1134	-11	-1%	13.7	499	14.7
		NB Right	82	79	-3	-4%	7.6	500	
SB	3.5	SB Through	1188	1195			3.7	234	
		SB Right	211	216			2.5	234	
EB	61.9	EB Left	128	127	-1	-1%	65.7	367	
		EB Right	241	245			60.0	436	
Route 50 at Old Glebe Rd (Unsignalized)									
NB	9.0	NB Left	0	0			215.1	42	0.8
		NB Right	18	18			9.0	41	
EB	0.4	EB Through	2340	2343			0.4	3	
		EB Right	12	12			1.3	3	
WB	1.1	WB Left	0	0			0.0	319	
		WB Through	3336	3310	-26	-1%	1.1	309	
Route 50 at Jackson Street (Unsignalized)									
SB	16.1	SB Left	2	2			37.9	63	1.5
		SB Right	52	53			15.3	69	
EB	2.6	EB Left	31	32			56.5	278	
		EB Through	2327	2330			1.8	268	
WB	0.5	WB Through	3284	3249	-35	-1%	0.5	45	
		WB Right	11	11			1.7	45	
Route 50 at Irving Street (Signalized)									
NB	83.8	NB Left	134	137			85.6	438	16.3
		NB Through	37	34	-3	-8%	77.8	438	
		NB Right	9	9			78.8	438	
SB	49.2	SB Left	17	20			61.0	245	
		SB Through	58	57	-1	-2%	58.2	245	
		SB Right	62	60	-2	-3%	36.8	245	
EB	17.5	EB Left	18	19			169.5	821	
		EB Through	2188	2182	-6		16.7	821	
		EB Right	123	121	-2	-2%	7.8	47	
WB	10.1	WB Left	12	11	-1	-8%	69.3	1228	
		WB Through	3099	3064	-35	-1%	9.8	1228	
		WB Right	8	7	-1	-13%	10.7	1234	
Route 50 at Hudson Street (Unsignalized)									
NB	30.5	NB Left	6	6			60.9	62	2.2
		NB Right	20	20			21.4	67	
EB	1.8	EB Through	2193	2192	-1		1.8	129	
		EB Right	21	19	-2	-10%	-0.4	129	
WB	2.2	WB Left	2	2			43.5	274	
		WB Through	3113	3076	-37	-1%	2.2	266	

Existing PM Peak Hour									
Approach	Approach Delay (sec/veh)	Movement	Volume Input	Volume Throughput	Vehicles Not Served	Percent Unserved	Delay (sec/veh)	Max Queue Length (feet)	Intersection Delay (sec/veh)
Route 50 at Highland Street (Unsignalized)									
NB	18.0	NB Left	0	0			0.0	26	3.2
		NB Through	0	0			0.0	0	
		NB Right	5	5			18.0	32	
SB	22.8	SB Left	7	8			36.6	94	
		SB Through	0	0			0.0	0	
		SB Right	63	62	-1	-2%	21.1	106	
EB	4.8	EB Left	24	25			56.9	292	
		EB Through	2184	2188			4.3	282	
		EB Right	5	4	-1	-20%	6.6	302	
WB	1.5	WB Left	2	2			50.6	268	
		WB Through	3052	3017	-35	-1%	1.4	257	
		WB Right	2	2			2.0	257	
Route 50 at Garfield Street (Unsignalized)									
NB	19.5	NB Left	1	1			32.2	32	3.6
		NB Through	0	0			0.0	0	
		NB Right	8	8			17.9	41	
SB	16.2	SB Left	0	0			0.0	56	
		SB Through	0	0			0.0	0	
		SB Right	48	48			16.2	70	
EB	5.8	EB Left	2	3			40.4	308	
		EB Through	2187	2208			5.8	299	
		EB Right	7	7			5.7	299	
WB	1.6	WB Left	3	3			75.7	329	
		WB Through	3007	2972	-35	-1%	1.6	325	
		WB Right	5	6			1.5	321	
Route 50 at Fenwick Street (Unsignalized)									
NB	36.5	NB Left	1	1			53.1	39	5.9
		NB Through	0	0			0.0	0	
		NB Right	8	8			34.5	43	
SB	14.4	SB Left	0	0			0.0	26	
		SB Through	0	0			0.0	0	
		SB Right	4	4			14.4	37	
EB	12.8	EB Left	2	3			39.5	350	
		EB Through	2177	2133	-44	-2%	12.8	341	
		EB Right	16	17			9.7	341	
WB	0.7	WB Left	0	0			0.0	110	
		WB Through	3010	2978	-32	-1%	0.8	109	
		WB Right	1	1			-0.3	109	

Existing PM Peak Hour									
Approach	Approach Delay (sec/veh)	Movement	Volume Input	Volume Throughput	Vehicles Not Served	Percent Unserved	Delay (sec/veh)	Max Queue Length (feet)	Intersection Delay (sec/veh)
Route 50 at Fillmore Street (Signalized)									
NB	255.5	NB Left	139	132	-7	-5%	299.5	1472	58.0
		NB Through	64	59	-5	-8%	293.2	1472	
		NB Right	184	176	-8	-4%	209.9	957	
SB	49.7	SB Left	20	20			64.8	408	
		SB Through	138	140			65.0	408	
		SB Right	69	67	-2	-3%	13.1	146	
EB	37.4	EB Left	57	58			78.0	175	
		EB Through	2073	2080			36.3	1258	
		EB Right	55	53	-2	-4%	35.0	1262	
WB	49.8	WB Left	348	335	-13	-4%	156.0	1657	
		WB Through	2803	2774	-29	-1%	37.0	1657	
		WB Right	8	9			33.0	1657	
Fillmore Street at North frontage road (Unsignalized)									
NB	0.5	NB Through	119	117	-2	-2%	0.6	26	27.7
		NB Right	10	10			-0.3	26	
SB	45.4	SB Left	2	2			27.2	334	
		SB Through	216	215	-1		45.6	324	
WB	12.1	WB Left	11	11			17.3	59	
		WB Right	15	15			8.3	68	
Fillmore Street at South frontage road (Unsignalized)									
NB	246.5	NB Left	0	0			0.0	1401	96.0
		NB Through	361	341	-20	-6%	247.1	1392	
		NB Right	8	7	-1	-13%	216.2	876	
SB	0.6	SB Left	12	11	-1	-8%	0.1	61	
		SB Through	522	512	-10	-2%	0.6	61	
		SB Right	7	6	-1	-14%	-0.4	61	
EB	40.9	EB Left	2	1	-1	-50%	220.7	62	
		EB Through	7	8			33.1	59	
		EB Right	7	6	-1	-14%	21.3	72	
WB	55.7	WB Left	3	3			35.1	94	
		WB Through	2	2			26.0	93	
		WB Right	24	22	-2	-8%	61.2	105	

2030 No Build AM Peak Hour									
Approach	Approach Delay (sec/veh)	Movement	Volume Input	Volume Throughput	Vehicles Not Served	Percent Unserved	Delay (sec/veh)	Max Queue Length (feet)	Intersection Delay (sec/veh)
Glebe Road at WB Route 50 ramps (Signalized)									
NB	7.5	NB Left	412	421			23.2	287	18.9
		NB Through	1381	1410			2.9	281	
SB	22.5	SB Through	834	846			24.9	565	
		SB Right	132	130	-2	-2%	6.9	66	
WB	92.3	WB Left	49	45	-4	-8%	92.0	421	
		WB Through	9	7	-2	-22%	87.9	421	
		WB Right	192	184	-8	-4%	92.5	421	
Glebe Road at EB Route 50 ramps (Signalized)									
NB	33.4	NB Through	1681	1683			33.7	1207	38.4
		NB Right	110	105	-5	-5%	27.3	1207	
SB	3.3	SB Through	745	756			3.1	173	
		SB Right	138	137	-1	-1%	4.9	173	
EB	149.9	EB Left	112	107	-5	-4%	143.8	595	
		EB Right	278	256	-22	-8%	152.5	2049	
Route 50 at Old Glebe Rd (Unsignalized)									
NB	69.6	NB Left	4	3	-1	-25%	142.9	74	26.5
		NB Right	16	16			55.8	73	
EB	41.7	EB Through	3386	3352	-34	-1%	41.7	4145	
		EB Right	1	1			26.2	4145	
WB	0.4	WB Left	0	0			0.0	20	
		WB Through	1965	1981			0.4	16	
Route 50 at Jackson Street (Unsignalized)									
SB	9.6	SB Left	1	1			39.5	51	17.7
		SB Right	25	25			8.4	57	
EB	27.8	EB Left	34	30	-4	-12%	78.8	672	
		EB Through	3368	3344	-24	-1%	27.4	661	
WB	0.3	WB Through	1940	1942			0.3	8	
		WB Right	4	3	-1	-25%	0.8	8	
Route 50 at Irving Street (Signalized)									
NB	151.4	NB Left	91	88	-3	-3%	156.3	696	62.8
		NB Through	74	76			154.0	695	
		NB Right	40	42			136.5	696	
SB	70.6	SB Left	13	14			87.1	180	
		SB Through	25	25			78.5	180	
		SB Right	17	17			45.3	180	
EB	90.5	EB Left	11	12			145.5	5403	
		EB Through	3340	3304	-36	-1%	90.8	5403	
		EB Right	18	20			14.5	3	
WB	2.6	WB Left	7	7			55.3	274	
		WB Through	1836	1833	-3		2.5	274	
		WB Right	10	10			1.9	253	
Route 50 at Hudson Street (Unsignalized)									
NB	131.8	NB Left	4	4			127.4	438	6.4
		NB Right	131	129	-2	-2%	132.0	442	
EB	4.8	EB Through	3389	3367	-22	-1%	4.8	284	
		EB Right	4	6			3.4	284	
WB	0.4	WB Left	0	0			0.0	42	
		WB Through	1849	1845	-4		0.4	37	

2030 No Build AM Peak Hour									
Approach	Approach Delay (sec/veh)	Movement	Volume Input	Volume Throughput	Vehicles Not Served	Percent Unserved	Delay (sec/veh)	Max Queue Length (feet)	Intersection Delay (sec/veh)
Route 50 at Highland Street (Unsignalized)									
NB	52.3	NB Left	1	1			66.4	129	4.6
		NB Through	0	0			0.0	0	
		NB Right	63	63			52.0	135	
SB	7.5	SB Left	0	0			0.0	33	
		SB Through	0	0			0.0	0	
		SB Right	27	26	-1	-4%	7.5	45	
EB	5.9	EB Left	16	16			40.8	319	
		EB Through	3504	3497	-7		5.7	309	
		EB Right	0	0			0.0	332	
WB	0.4	WB Left	0	0			0.0	42	
		WB Through	1821	1815	-6		0.4	36	
		WB Right	5	4	-1	-20%	1.5	36	
Route 50 at Garfield Street (Unsignalized)									
NB	161.2	NB Left	2	2			193.7	320	5.5
		NB Through	0	0			0.0	0	
		NB Right	72	74			160.3	330	
SB	7.5	SB Left	0	0			0.0	28	
		SB Through	0	0			0.0	0	
		SB Right	9	9			7.5	43	
EB	4.9	EB Left	3	3			33.8	323	
		EB Through	3561	3556	-5		4.8	314	
		EB Right	3	4			2.9	314	
WB	0.3	WB Left	0	0			0.0	15	
		WB Through	1815	1807	-8		0.3	14	
		WB Right	1	1			2.4	14	
Route 50 at Fenwick Street (Unsignalized)									
NB	62.5	NB Left	1	0	-1	-100%	56.4	75	6.4
		NB Through	0	0			0.0	0	
		NB Right	27	27			62.5	79	
SB	7.2	SB Left	0	0			0.0	28	
		SB Through	0	0			0.0	0	
		SB Right	3	3			7.2	39	
EB	9.0	EB Left	1	1			32.8	351	
		EB Through	3628	3602	-26	-1%	9.0	342	
		EB Right	4	5			13.5	342	
WB	0.5	WB Left	0	0			0.0	0	
		WB Through	1812	1801	-11	-1%	0.5	0	
		WB Right	2	3			-0.1	0	

2030 No Build AM Peak Hour									
Approach	Approach Delay (sec/veh)	Movement	Volume Input	Volume Throughput	Vehicles Not Served	Percent Unserved	Delay (sec/veh)	Max Queue Length (feet)	Intersection Delay (sec/veh)
Route 50 at Fillmore Street (Signalized)									
NB	210.4	NB Left	70	68	-2	-3%	250.8	1471	41.8
		NB Through	56	55	-1	-2%	251.9	1471	
		NB Right	301	285	-16	-5%	192.7	1454	
SB	73.8	SB Left	34	32	-2	-6%	98.2	386	
		SB Through	69	70			95.6	386	
		SB Right	41	39	-2	-5%	14.4	154	
EB	29.4	EB Left	18	19			77.8	77	
		EB Through	3603	3589	-14		29.1	1464	
		EB Right	34	32	-2	-6%	33.5	1468	
WB	26.1	WB Left	98	89	-9	-9%	273.0	403	
		WB Through	1703	1695	-8		13.4	472	
		WB Right	25	23	-2	-8%	13.1	472	
Fillmore Street at North frontage road (Unsignalized)									
NB	0.5	NB Through	94	92	-2	-2%	0.6	51	35.7
		NB Right	5	5			-0.3	51	
SB	65.7	SB Left	4	5			66.8	303	
		SB Through	133	132	-1	-1%	65.7	293	
WB	12.8	WB Left	11	11			21.2	58	
		WB Right	19	20			8.2	67	
Fillmore Street at South frontage road (Unsignalized)									
NB	203.6	NB Left	0	0			0.0	1380	132.0
		NB Through	407	386	-21	-5%	203.6	1372	
		NB Right	0	0			267.9	1342	
SB	0.8	SB Left	11	9	-2	-18%	4.0	112	
		SB Through	186	178	-8	-4%	0.6	101	
		SB Right	4	4			-0.3	101	
EB	63.6	EB Left	10	11			72.1	93	
		EB Through	2	2			44.4	91	
		EB Right	1	1			8.5	101	
WB	16.5	WB Left	3	3			17.4	39	
		WB Through	2	1	-1	-50%	14.0	37	
		WB Right	10	10			16.5	49	

2030 No Build PM Peak Hour									
Approach	Approach Delay (sec/veh)	Movement	Volume Input	Volume Throughput	Vehicles Not Served	Percent Unserved	Delay (sec/veh)	Max Queue Length (feet)	Intersection Delay (sec/veh)
Glebe Road at WB Route 50 ramps (Signalized)									
NB	13.6	NB Left	352	336	-16	-5%	44.2	280	25.7
		NB Through	997	972	-25	-3%	3.0	281	
SB	29.1	SB Through	1446	1451			30.6	1090	
		SB Right	166	163	-3	-2%	16.4	28	
WB	70.8	WB Left	112	106	-6	-5%	79.5	399	
		WB Through	4	5			65.3	399	
		WB Right	119	117	-2	-2%	63.1	399	
Glebe Road at EB Route 50 ramps (Signalized)									
NB	37.8	NB Through	1206	1162	-44	-4%	38.8	867	33.8
		NB Right	87	81	-6	-7%	23.6	867	
SB	4.1	SB Through	1323	1326			4.1	240	
		SB Right	235	237			4.1	240	
EB	137.3	EB Left	143	140	-3	-2%	172.4	1071	
		EB Right	255	260			118.4	1022	
Route 50 at Old Glebe Rd (Unsignalized)									
NB	11.6	NB Left	0	0			0.0	42	2.4
		NB Right	19	19			11.6	41	
EB	3.8	EB Through	2445	2437	-8		3.8	325	
		EB Right	13	13			6.0	325	
WB	1.3	WB Left	0	0			0.0	452	
		WB Through	3486	3414	-72	-2%	1.3	441	
Route 50 at Jackson Street (Unsignalized)									
SB	21.9	SB Left	2	2			64.8	82	3.4
		SB Right	54	55			20.4	88	
EB	6.6	EB Left	32	32			65.8	388	
		EB Through	2432	2427	-5		5.9	386	
WB	0.7	WB Through	3432	3354	-78	-2%	0.7	204	
		WB Right	11	10	-1	-9%	2.6	204	
Route 50 at Irving Street (Signalized)									
NB	89.9	NB Left	140	142			91.9	486	21.2
		NB Through	39	37	-2	-5%	86.5	486	
		NB Right	9	9			71.6	486	
SB	51.5	SB Left	18	20			64.6	280	
		SB Through	61	62			57.3	280	
		SB Right	65	62	-3	-5%	41.4	280	
EB	26.7	EB Left	19	19			220.7	967	
		EB Through	2286	2276	-10		26.0	967	
		EB Right	129	126	-3	-2%	10.1	43	
WB	11.6	WB Left	13	12	-1	-8%	59.8	1315	
		WB Through	3238	3160	-78	-2%	11.4	1315	
		WB Right	8	7	-1	-13%	11.9	1320	
Route 50 at Hudson Street (Unsignalized)									
NB	37.8	NB Left	6	6			61.9	72	3.3
		NB Right	21	20	-1	-5%	30.5	77	
EB	3.8	EB Through	2291	2290	-1		3.8	254	
		EB Right	22	20	-2	-9%	0.4	254	
WB	2.7	WB Left	2	2			58.9	277	
		WB Through	3253	3174	-79	-2%	2.7	268	

2030 No Build PM Peak Hour									
Approach	Approach Delay (sec/veh)	Movement	Volume Input	Volume Throughput	Vehicles Not Served	Percent Unserved	Delay (sec/veh)	Max Queue Length (feet)	Intersection Delay (sec/veh)
Route 50 at Highland Street (Unsignalized)									
NB	19.1	NB Left	0	0			0.0	26	4.6
		NB Through	0	0			0.0	0	
		NB Right	5	5			19.1	32	
SB	32.8	SB Left	7	8			48.7	123	
		SB Through	0	0			0.0	0	
		SB Right	66	66			30.9	135	
EB	7.7	EB Left	25	25			59.1	301	
		EB Through	2282	2294			7.1	291	
		EB Right	5	4	-1	-20%	5.1	314	
WB	1.7	WB Left	2	2			47.4	296	
		WB Through	3189	3113	-76	-2%	1.7	285	
		WB Right	2	2			3.9	285	
Route 50 at Garfield Street (Unsignalized)									
NB	27.5	NB Left	1	1			35.0	32	4.8
		NB Through	0	0			0.0	0	
		NB Right	8	8			26.6	41	
SB	19.3	SB Left	0	0			0.0	68	
		SB Through	0	0			0.0	0	
		SB Right	50	49	-1	-2%	19.3	83	
EB	8.2	EB Left	2	2			50.4	315	
		EB Through	2285	2311			8.2	307	
		EB Right	7	8			4.7	307	
WB	1.9	WB Left	3	3			124.1	341	
		WB Through	3142	3070	-72	-2%	1.8	338	
		WB Right	5	6			2.7	334	
Route 50 at Fenwick Street (Unsignalized)									
NB	42.3	NB Left	1	1			49.9	35	8.0
		NB Through	0	0			0.0	0	
		NB Right	8	8			41.3	39	
SB	15.8	SB Left	0	0			0.0	26	
		SB Through	0	0			0.0	0	
		SB Right	4	4			15.8	37	
EB	17.6	EB Left	2	3			40.8	350	
		EB Through	2274	2230	-44	-2%	17.6	342	
		EB Right	17	17			13.3	342	
WB	0.8	WB Left	0	0			0.0	164	
		WB Through	3145	3075	-70	-2%	0.8	155	
		WB Right	1	1			-0.1	155	

2030 No Build PM Peak Hour									
Approach	Approach Delay (sec/veh)	Movement	Volume Input	Volume Throughput	Vehicles Not Served	Percent Unserved	Delay (sec/veh)	Max Queue Length (feet)	Intersection Delay (sec/veh)
Route 50 at Fillmore Street (Signalized)									
NB	450.4	NB Left	147	125	-22	-15%	490.9	2291	81.2
		NB Through	68	59	-9	-13%	490.3	2291	
		NB Right	194	170	-24	-12%	406.8	2242	
SB	54.1	SB Left	21	21			70.5	447	
		SB Through	146	150			69.0	447	
		SB Right	73	72	-1	-1%	18.1	148	
EB	49.3	EB Left	60	60			79.1	190	
		EB Through	2164	2175			48.5	1404	
		EB Right	58	56	-2	-3%	47.3	1408	
WB	65.4	WB Left	368	346	-22	-6%	193.5	2337	
		WB Through	2926	2866	-60	-2%	50.0	2337	
		WB Right	8	8			43.4	2337	
Fillmore Street at North frontage road (Unsignalized)									
NB	0.5	NB Through	125	117	-8	-6%	0.6	19	30.8
		NB Right	11	10	-1	-9%	-0.3	19	
SB	49.6	SB Left	2	2			44.0	376	
		SB Through	228	229			49.7	366	
WB	12.4	WB Left	12	12			17.6	54	
		WB Right	16	16			8.6	63	
Fillmore Street at South frontage road (Unsignalized)									
NB	441.2	NB Left	0	0			0.0	2220	161.6
		NB Through	382	325	-57	-15%	441.8	2211	
		NB Right	8	7	-1	-13%	412.0	2161	
SB	0.6	SB Left	13	12	-1	-8%	0.9	71	
		SB Through	552	532	-20	-4%	0.6	71	
		SB Right	7	7			-0.4	71	
EB	67.1	EB Left	2	2			204.4	76	
		EB Through	7	8			39.3	73	
		EB Right	7	6	-1	-14%	58.4	86	
WB	70.6	WB Left	3	3			68.3	105	
		WB Through	2	2			43.5	104	
		WB Right	25	24	-1	-4%	73.1	116	

2030 Build 1A AM Peak Hour									
Approach	Approach Delay (sec/veh)	Movement	Volume Input	Volume Throughput	Vehicles Not Served	Percent Unserved	Delay (sec/veh)	Max Queue Length (feet)	Intersection Delay (sec/veh)
Glebe Road at WB Route 50 ramps (Signalized)									
NB	7.5	NB Left	416	421			23.0	284	18.8
		NB Through	1381	1405			2.9	281	
SB	22.0	SB Through	834	845			24.3	563	
		SB Right	132	130	-2	-2%	6.8	33	
WB	92.6	WB Left	49	46	-3	-6%	87.6	421	
		WB Through	9	7	-2	-22%	85.6	421	
		WB Right	192	184	-8	-4%	94.2	421	
Glebe Road at EB Route 50 ramps (Signalized)									
NB	29.8	NB Through	1685	1686			30.2	1194	32.1
		NB Right	110	105	-5	-5%	23.8	1194	
SB	2.9	SB Through	745	757			3.1	136	
		SB Right	138	137	-1	-1%	1.7	136	
EB	110.6	EB Left	112	113			102.9	506	
		EB Right	278	273	-5	-2%	113.9	1061	
Route 50 at Old Glebe Rd (Unsignalized)									
NB	43.2	NB Right	16	15	-1	-6%	43.2	55	4.6
EB	6.7	EB Through	3386	3513			6.7	1021	
		EB Right	1	1			2.8	1021	
WB	0.6	WB Through	1965	1975			0.6	55	
Route 50 at Jackson Street (Unsignalized)									
SB	11.3	SB Right	25	25			11.3	54	7.9
EB	12.1	EB Through	3402	3540			12.1	647	
WB	0.4	WB Through	1940	1935	-5		0.4	30	
		WB Right	4	3	-1	-25%	0.6	30	
Route 50 at Irving Street (Signalized)									
NB	100.0	NB Left	98	94	-4	-4%	102.7	578	30.4
		NB Through	74	76			104.6	577	
		NB Right	40	42			85.6	578	
SB	71.5	SB Left	14	15			92.4	171	
		SB Through	25	25			79.2	171	
		SB Right	17	17			41.9	172	
EB	37.0	EB Left	58	59			111.3	176	
		EB Through	3326	3444			35.9	2265	
		EB Right	18	22			13.6	3	
WB	8.4	WB Left	22	22			129.1	102	
		WB Through	1829	1819	-10	-1%	7.0	214	
		WB Right	10	10			3.8	221	
Route 50 at Hudson Street (Unsignalized)									
NB	66.0	NB Right	131	131			66.0	287	3.3
EB	2.5	EB Through	3376	3505			2.5	318	
		EB Right	4	6			1.4	278	
WB	0.3	WB Through	1861	1835	-26	-1%	0.3	0	
Route 50 at Highland Street (Unsignalized)									
NB	43.7	NB Right	63	63			43.7	127	3.1
SB	7.6	SB Right	27	27			7.6	49	
EB	3.7	EB Through	3507	3651			3.7	274	
		EB Right	0	0			0.0	254	
WB	0.5	WB Through	1834	1829	-5		0.5	108	
		WB Right	5	4	-1	-20%	0.7	108	

2030 Build 1A AM Peak Hour									
Approach	Approach Delay (sec/veh)	Movement	Volume Input	Volume Throughput	Vehicles Not Served	Percent Unserved	Delay (sec/veh)	Max Queue Length (feet)	Intersection Delay (sec/veh)
Route 50 at Garfield Street (Unsignalized)									
NB	112.9	NB Right	72	71	-1	-1%	112.9	274	4.1
SB	7.4	SB Right	9	9			7.4	40	
EB	3.9	EB Through	3567	3720			3.9	301	
		EB Right	3	4			10.0	284	
WB	0.3	WB Through	1830	1823	-7		0.3	0	
		WB Right	1	1			0.5	0	
Route 50 at Fenwick Street (Unsignalized)									
NB	278.7	NB Right	27	28			278.7	183	7.5
SB	7.3	SB Right	3	3			7.3	39	
EB	9.0	EB Through	3635	3757			9.0	339	
		EB Right	4	4			6.2	320	
WB	0.4	WB Through	1828	1818	-10	-1%	0.4	0	
		WB Right	2	3			-0.2	0	
Route 50 at Fillmore Street (Signalized)									
NB	144.0	NB Left	71	69	-2	-3%	183.1	1221	31.9
		NB Through	56	55	-1	-2%	181.3	1221	
		NB Right	301	288	-13	-4%	127.5	1166	
SB	77.6	SB Left	34	32	-2	-6%	101.9	393	
		SB Through	69	71			99.4	393	
		SB Right	41	39	-2	-5%	18.0	153	
EB	24.6	EB Left	25	29			82.2	106	
		EB Through	3603	3743			24.1	1417	
		EB Right	34	34			26.1	1421	
WB	18.2	WB Left	83	78	-5	-6%	118.6	232	
		WB Through	1718	1711	-7		13.7	472	
		WB Right	25	23	-2	-8%	13.7	472	
Fillmore Street at North frontage road (Unsignalized)									
NB	0.5	NB Through	101	101			0.6	51	36.7
		NB Right	5	5			-0.3	51	
SB	69.9	SB Left	4	5			72.8	314	
		SB Through	133	132	-1	-1%	69.8	304	
WB	14.0	WB Left	11	11			22.3	59	
		WB Right	19	20			9.4	69	
Fillmore Street at South frontage road (Unsignalized)									
NB	137.3	NB Left	0	0			0.0	1121	91.0
		NB Through	408	389	-19	-5%	137.3	1114	
		NB Right	0	0			185.3	1056	
SB	0.8	SB Left	11	10	-1	-9%	4.9	119	
		SB Through	171	168	-3	-2%	0.6	109	
		SB Right	4	4			-0.3	109	
EB	61.0	EB Left	10	11			69.1	87	
		EB Through	2	2			40.3	85	
		EB Right	1	1			13.3	95	
WB	16.8	WB Left	3	3			21.9	44	
		WB Through	2	2			25.3	42	
		WB Right	10	11			13.9	54	

2030 Build 1A PM Peak Hour									
Approach	Approach Delay (sec/veh)	Movement	Volume Input	Volume Throughput	Vehicles Not Served	Percent Unserved	Delay (sec/veh)	Max Queue Length (feet)	Intersection Delay (sec/veh)
Glebe Road at WB Route 50 ramps (Signalized)									
NB	13.4	NB Left	352	337	-15	-4%	43.6	273	24.5
		NB Through	997	975	-22	-2%	3.0	273	
SB	27.2	SB Through	1446	1457			28.6	1072	
		SB Right	166	164	-2	-1%	15.1	37	
WB	67.6	WB Left	112	109	-3	-3%	76.1	367	
		WB Through	4	5			71.6	367	
		WB Right	119	118	-1	-1%	59.5	367	
Glebe Road at EB Route 50 ramps (Signalized)									
NB	31.5	NB Through	1206	1168	-38	-3%	32.4	901	30.6
		NB Right	87	82	-5	-6%	19.8	901	
SB	3.9	SB Through	1323	1334			4.1	238	
		SB Right	235	237			3.1	238	
EB	134.4	EB Left	143	137	-6	-4%	172.6	1001	
		EB Right	255	256			113.9	901	
Route 50 at Old Glebe Rd (Unsignalized)									
NB	9.5	NB Right	19	19			9.5	44	1.5
EB	0.4	EB Through	2445	2432	-13	-1%	0.4	0	
		EB Right	13	13			0.8	0	
WB	2.3	WB Through	3486	3413	-73	-2%	2.3	508	
Route 50 at Jackson Street (Unsignalized)									
SB	21.1	SB Right	54	55			21.1	87	0.9
EB	0.9	EB Through	2464	2441	-23	-1%	0.9	224	
WB	0.6	WB Through	3432	3356	-76	-2%	0.6	128	
		WB Right	11	10	-1	-9%	1.1	128	
Route 50 at Irving Street (Signalized)									
NB	93.5	NB Left	147	148			94.1	518	23.6
		NB Through	39	39			94.8	518	
		NB Right	9	9			78.6	518	
SB	54.2	SB Left	24	26			57.4	292	
		SB Through	61	62			59.9	292	
		SB Right	65	62	-3	-5%	47.2	292	
EB	21.3	EB Left	75	72	-3	-4%	106.3	213	
		EB Through	2260	2214	-46	-2%	19.1	807	
		EB Right	129	125	-4	-3%	11.0	94	
WB	19.7	WB Left	75	77			105.7	195	
		WB Through	3231	3159	-72	-2%	17.6	1350	
		WB Right	8	7	-1	-13%	16.6	1357	
Route 50 at Hudson Street (Unsignalized)									
NB	10.0	NB Right	21	21			10.0	46	2.5
EB	0.5	EB Through	2271	2225	-46	-2%	0.6	57	
		EB Right	22	20	-2	-9%	-0.6	57	
WB	3.9	WB Through	3314	3166	-148	-4%	3.9	268	
Route 50 at Highland Street (Unsignalized)									
NB	10.0	NB Right	5	5			10.0	28	2.2
SB	24.5	SB Right	66	66			24.5	107	
EB	1.4	EB Through	2287	2243	-44	-2%	1.4	221	
		EB Right	5	4	-1	-20%	2.0	221	
WB	2.4	WB Through	3248	3181	-67	-2%	2.4	291	
		WB Right	2	2			1.8	291	

2030 Build 1A PM Peak Hour									
Approach	Approach Delay (sec/veh)	Movement	Volume Input	Volume Throughput	Vehicles Not Served	Percent Unserved	Delay (sec/veh)	Max Queue Length (feet)	Intersection Delay (sec/veh)
Route 50 at Garfield Street (Unsignalized)									
NB	13.9	NB Right	8	8			13.9	36	2.7
SB	21.0	SB Right	50	50			21.0	87	
EB	3.2	EB Through	2285	2255	-30	-1%	3.2	299	
		EB Right	7	7			3.8	299	
WB	2.1	WB Through	3200	3139	-61	-2%	2.1	329	
		WB Right	5	6			2.4	325	
Route 50 at Fenwick Street (Unsignalized)									
NB	27.5	NB Right	8	8			27.5	34	3.4
SB	19.1	SB Right	4	4			19.1	38	
EB	6.9	EB Through	2276	2185	-91	-4%	6.9	335	
		EB Right	17	17			3.8	335	
WB	0.9	WB Through	3201	3142	-59	-2%	0.9	189	
		WB Right	1	1			-0.2	189	
Route 50 at Fillmore Street (Signalized)									
NB	432.4	NB Left	148	125	-23	-16%	474.7	2193	52.9
		NB Through	68	58	-10	-15%	468.4	2193	
		NB Right	194	168	-26	-13%	388.6	1572	
SB	52.0	SB Left	24	23	-1	-4%	66.8	468	
		SB Through	146	147			67.0	468	
		SB Right	73	71	-2	-3%	15.9	144	
EB	24.4	EB Left	65	66			60.4	150	
		EB Through	2161	2129	-32	-1%	23.3	1107	
		EB Right	58	55	-3	-5%	23.3	1111	
WB	31.6	WB Left	313	299	-14	-4%	83.5	683	
		WB Through	2981	2935	-46	-2%	26.4	1142	
		WB Right	8	8			25.8	1142	
Fillmore Street at North frontage road (Unsignalized)									
NB	0.5	NB Through	130	121	-9	-7%	0.6	26	29.0
		NB Right	11	10	-1	-9%	-0.3	26	
SB	47.5	SB Left	2	2			48.9	392	
		SB Through	231	228	-3	-1%	47.5	381	
WB	11.0	WB Left	12	12			13.9	54	
		WB Right	16	16			8.8	63	
Fillmore Street at South frontage road (Unsignalized)									
NB	423.7	NB Left	0	0			0.0	2123	162.1
		NB Through	383	323	-60	-16%	424.1	2113	
		NB Right	8	7	-1	-13%	408.8	1493	
SB	0.6	SB Left	13	12	-1	-8%	0.1	66	
		SB Through	497	483	-14	-3%	0.6	66	
		SB Right	7	6	-1	-14%	-0.4	66	
EB	25.6	EB Left	2	1	-1	-50%	116.4	41	
		EB Through	7	8			21.3	39	
		EB Right	7	6	-1	-14%	16.3	51	
WB	41.0	WB Left	3	3			33.7	93	
		WB Through	2	2			19.9	92	
		WB Right	25	23	-2	-8%	43.8	104	

2030 Build 1B AM Peak Hour									
Approach	Approach Delay (sec/veh)	Movement	Volume Input	Volume Throughput	Vehicles Not Served	Percent Unserved	Delay (sec/veh)	Max Queue Length (feet)	Intersection Delay (sec/veh)
Glebe Road at WB Route 50 ramps (Signalized)									
NB	7.5	NB Left	416	421			22.9	286	18.7
		NB Through	1381	1406			2.9	284	
SB	22.0	SB Through	834	845			24.3	563	
		SB Right	132	130	-2	-2%	6.9	44	
WB	91.3	WB Left	49	46	-3	-6%	89.4	432	
		WB Through	9	7	-2	-22%	82.4	432	
		WB Right	192	185	-7	-4%	92.1	432	
Glebe Road at EB Route 50 ramps (Signalized)									
NB	26.9	NB Through	1685	1687			27.2	1203	30.3
		NB Right	110	105	-5	-5%	22.0	1203	
SB	2.9	SB Through	745	757			3.1	134	
		SB Right	138	137	-1	-1%	1.7	134	
EB	110.0	EB Left	112	113			104.9	374	
		EB Right	278	274	-4	-1%	112.1	1289	
Route 50 at Old Glebe Rd (Unsignalized)									
NB	105.0	NB Right	16	16			105.0	57	10.6
EB	15.8	EB Through	3386	3499			15.8	1891	
		EB Right	1	1			15.2	1891	
WB	0.6	WB Through	1965	1982			0.6	52	
Route 50 at Jackson Street (Unsignalized)									
SB	12.0	SB Right	25	25			12.0	53	11.4
EB	17.5	EB Through	3402	3531			17.5	660	
WB	0.3	WB Through	1940	1940			0.3	18	
		WB Right	4	3	-1	-25%	0.6	18	
Route 50 at Irving Street (Signalized)									
NB	106.4	NB Left	169	168	-1	-1%	112.5	692	42.3
		NB Right	77	77			93.3	692	
SB	70.3	SB Left	56	57			76.2	194	
		SB Right	17	16	-1	-6%	49.2	194	
EB	54.2	EB Left	58	58			108.3	170	
		EB Through	3326	3432			53.6	3147	
		EB Right	18	22			15.5	0	
WB	9.0	WB Left	29	28	-1	-3%	125.1	108	
		WB Through	1758	1753	-5		7.2	236	
		WB Right	10	10			4.7	213	
Route 50 at Hudson Street (Unsignalized)									
NB	86.1	NB Right	131	130	-1	-1%	86.1	333	4.1
EB	3.0	EB Through	3455	3567			3.0	314	
		EB Right	4	6			1.0	275	
WB	0.3	WB Through	1797	1770	-27	-2%	0.3	31	
Route 50 at Highland Street (Unsignalized)									
NB	45.4	NB Right	63	63			45.4	137	3.5
SB	7.7	SB Right	27	27			7.7	48	
EB	4.3	EB Through	3586	3716			4.3	273	
		EB Right	0	0			24.4	254	
WB	0.4	WB Through	1770	1771			0.4	103	
		WB Right	5	4	-1	-20%	1.3	103	

2030 Build 1B AM Peak Hour									
Approach	Approach Delay (sec/veh)	Movement	Volume Input	Volume Throughput	Vehicles Not Served	Percent Unserved	Delay (sec/veh)	Max Queue Length (feet)	Intersection Delay (sec/veh)
Route 50 at Garfield Street (Unsignalized)									
NB	175.7	NB Right	72	72			175.7	312	5.6
SB	7.1	SB Right	9	9			7.1	40	
EB	4.9	EB Through	3646	3786			4.9	310	
		EB Right	3	4			6.3	293	
WB	0.3	WB Through	1766	1764	-2		0.3	0	
		WB Right	1	1			0.4	0	
Route 50 at Fenwick Street (Unsignalized)									
NB	150.5	NB Right	27	28			150.5	138	7.5
SB	7.6	SB Right	3	3			7.6	39	
EB	9.7	EB Through	3714	3782			9.7	337	
		EB Right	4	4			3.7	319	
WB	0.4	WB Through	1764	1760	-4		0.4	0	
		WB Right	2	3			-0.3	0	
Route 50 at Fillmore Street (Signalized)									
NB	76.0	NB Through	93	91	-2	-2%	107.1	804	28.3
		NB Right	301	289	-12	-4%	66.2	798	
SB	54.8	SB Through	79	76	-3	-4%	83.1	306	
		SB Right	48	50			11.8	151	
EB	27.8	EB Left	62	69			90.3	169	
		EB Through	3637	3758			26.6	1423	
		EB Right	42	43			30.2	1427	
WB	17.6	WB Left	83	78	-5	-6%	116.6	232	
		WB Through	1718	1711	-7		13.2	478	
		WB Right	25	23	-2	-8%	13.2	478	
Fillmore Street at North frontage road (Unsignalized)									
NB	0.6	NB Through	175	177			0.6	51	19.0
		NB Right	5	5			-0.3	51	
SB	49.0	SB Left	4	4			58.5	222	
		SB Through	119	119			48.6	212	
WB	7.6	WB Left	8	8			11.5	51	
		WB Right	19	20			6.1	61	
Fillmore Street at South frontage road (Unsignalized)									
NB	70.6	NB Left	0	0			0.0	716	45.3
		NB Through	377	362	-15	-4%	70.6	709	
		NB Right	0	0			0.0	0	
SB	0.7	SB Left	11	9	-2	-18%	3.2	106	
		SB Through	189	184	-5	-3%	0.6	94	
		SB Right	4	4			-0.3	94	
EB	51.9	EB Left	9	10			57.8	66	
		EB Through	2	2			40.4	64	
		EB Right	1	1			16.0	75	
WB	10.6	WB Left	3	3			12.0	38	
		WB Through	2	1	-1	-50%	13.4	36	
		WB Right	8	9			9.8	48	

2030 Build 1B PM Peak Hour									
Approach	Approach Delay (sec/veh)	Movement	Volume Input	Volume Throughput	Vehicles Not Served	Percent Unserved	Delay (sec/veh)	Max Queue Length (feet)	Intersection Delay (sec/veh)
Glebe Road at WB Route 50 ramps (Signalized)									
NB	13.7	NB Left	352	334	-18	-5%	44.4	276	24.7
		NB Through	997	973	-24	-2%	3.1	276	
SB	27.1	SB Through	1446	1457			28.5	1046	
		SB Right	166	164	-2	-1%	14.9	135	
WB	68.8	WB Left	112	110	-2	-2%	75.0	344	
		WB Through	4	5			57.4	344	
		WB Right	119	120			63.7	344	
Glebe Road at EB Route 50 ramps (Signalized)									
NB	42.7	NB Through	1206	1159	-47	-4%	43.7	841	36.6
		NB Right	87	82	-5	-6%	28.7	841	
SB	3.9	SB Through	1323	1334			4.1	239	
		SB Right	235	237			3.2	239	
EB	148.5	EB Left	143	138	-5	-3%	181.9	883	
		EB Right	255	254	-1		130.3	840	
Route 50 at Old Glebe Rd (Unsignalized)									
NB	10.4	NB Right	19	19			10.4	44	1.5
EB	0.4	EB Through	2445	2423	-22	-1%	0.4	8	
		EB Right	13	13			0.9	8	
WB	2.2	WB Through	3486	3449	-37	-1%	2.2	578	
Route 50 at Jackson Street (Unsignalized)									
SB	21.0	SB Right	54	55			21.0	83	1.1
EB	1.3	EB Through	2464	2446	-18	-1%	1.3	300	
WB	0.6	WB Through	3432	3395	-37	-1%	0.6	97	
		WB Right	11	10	-1	-9%	1.6	97	
Route 50 at Irving Street (Signalized)									
NB	82.9	NB Left	295	294	-1		83.9	790	27.0
		NB Right	29	30			73.0	790	
SB	48.2	SB Left	66	70			55.8	221	
		SB Right	65	60	-5	-8%	39.4	221	
EB	23.0	EB Left	75	73	-2	-3%	79.3	183	
		EB Through	2260	2225	-35	-2%	21.8	883	
		EB Right	129	125	-4	-3%	11.8	42	
WB	23.6	WB Left	93	94			100.5	218	
		WB Through	3083	3053	-30	-1%	21.2	1362	
		WB Right	8	6	-2	-25%	20.5	1369	
Route 50 at Hudson Street (Unsignalized)									
NB	9.8	NB Right	21	21			9.8	47	3.0
EB	0.5	EB Through	2333	2303	-30	-1%	0.5	61	
		EB Right	22	20	-2	-9%	-0.5	61	
WB	4.8	WB Through	3184	3060	-124	-4%	4.8	273	
Route 50 at Highland Street (Unsignalized)									
NB	9.5	NB Right	5	5			9.5	28	2.7
SB	28.9	SB Right	66	66			28.9	124	
EB	1.3	EB Through	2349	2325	-24	-1%	1.3	237	
		EB Right	5	5			2.1	237	
WB	3.2	WB Through	3118	3089	-29	-1%	3.2	290	
		WB Right	2	3			2.3	290	

2030 Build 1B PM Peak Hour									
Approach	Approach Delay (sec/veh)	Movement	Volume Input	Volume Throughput	Vehicles Not Served	Percent Unserved	Delay (sec/veh)	Max Queue Length (feet)	Intersection Delay (sec/veh)
Route 50 at Garfield Street (Unsignalized)									
NB	16.7	NB Right	8	8			16.7	37	3.0
SB	22.3	SB Right	50	50			22.3	89	
EB	2.8	EB Through	2347	2334	-13	-1%	2.8	290	
		EB Right	7	8			3.2	290	
WB	2.8	WB Through	3070	3050	-20	-1%	2.8	331	
		WB Right	5	6			3.5	328	
Route 50 at Fenwick Street (Unsignalized)									
NB	36.0	NB Right	8	8			36.0	42	3.3
SB	17.6	SB Right	4	4			17.6	37	
EB	6.0	EB Through	2338	2239	-99	-4%	6.0	329	
		EB Right	17	19			3.5	329	
WB	1.1	WB Through	3071	3051	-20	-1%	1.1	196	
		WB Right	1	1			-0.5	196	
Route 50 at Fillmore Street (Signalized)									
NB	38.1	NB Through	87	90			77.3	359	28.1
		NB Right	194	192	-2	-1%	19.8	215	
SB	49.9	SB Through	171	173			67.5	480	
		SB Right	91	89	-2	-2%	15.7	158	
EB	23.5	EB Left	85	88			80.8	177	
		EB Through	2185	2166	-19	-1%	21.2	1113	
		EB Right	76	74	-2	-3%	20.7	1115	
WB	28.7	WB Left	313	307	-6	-2%	85.9	573	
		WB Through	2981	2951	-30	-1%	22.8	1033	
		WB Right	8	8			24.0	1033	
Fillmore Street at North frontage road (Unsignalized)									
NB	0.6	NB Through	169	175			0.6	26	25.7
		NB Right	11	10	-1	-9%	-0.3	26	
SB	45.8	SB Left	2	2			33.0	404	
		SB Through	251	250	-1		45.9	394	
WB	11.0	WB Left	11	11			16.5	55	
		WB Right	16	16			7.2	64	
Fillmore Street at South frontage road (Unsignalized)									
NB	32.6	NB Left	0	0			0.0	290	11.1
		NB Through	264	264			33.1	281	
		NB Right	8	7	-1	-13%	12.1	132	
SB	0.6	SB Left	13	12	-1	-8%	0.1	65	
		SB Through	540	535	-5	-1%	0.6	65	
		SB Right	7	7			-0.3	65	
EB	15.1	EB Left	1	0	-1	-100%	0.0	40	
		EB Through	7	9			17.2	37	
		EB Right	7	6	-1	-14%	12.1	49	
WB	8.5	WB Left	3	3			12.4	46	
		WB Through	2	2			15.7	45	
		WB Right	16	16			6.8	57	

2030 Build 1C AM Peak Hour									
Approach	Approach Delay (sec/veh)	Movement	Volume Input	Volume Throughput	Vehicles Not Served	Percent Unserved	Delay (sec/veh)	Max Queue Length (feet)	Intersection Delay (sec/veh)
Glebe Road at WB Route 50 ramps (Signalized)									
NB	7.5	NB Left	416	421			22.8	286	18.9
		NB Through	1381	1404			2.9	282	
SB	22.0	SB Through	834	845			24.3	563	
		SB Right	132	130	-2	-2%	6.8	40	
WB	92.7	WB Left	49	46	-3	-6%	87.2	457	
		WB Through	9	7	-2	-22%	82.7	457	
		WB Right	192	186	-6	-3%	94.5	457	
Glebe Road at EB Route 50 ramps (Signalized)									
NB	28.0	NB Through	1685	1685			28.4	1088	32.4
		NB Right	110	104	-6	-5%	22.2	1088	
SB	2.9	SB Through	745	756			3.0	154	
		SB Right	138	136	-2	-1%	2.2	154	
EB	121.2	EB Left	112	112			110.5	302	
		EB Right	278	271	-7	-3%	125.7	1418	
Route 50 at Old Glebe Rd (Unsignalized)									
NB	843.8	NB Right	16	13	-3	-19%	843.8	176	23.0
EB	32.9	EB Through	3386	3444			32.9	3519	
		EB Right	1	1			34.0	3519	
WB	0.6	WB Through	1965	1989			0.6	59	
Route 50 at Jackson Street (Unsignalized)									
SB	12.6	SB Right	25	25			12.6	56	16.0
EB	24.8	EB Through	3402	3483			24.8	666	
WB	0.4	WB Through	1940	1949			0.4	55	
		WB Right	4	3	-1	-25%	0.8	55	
Route 50 at Irving Street (Signalized)									
NB	82.4	NB Through	96	92	-4	-4%	91.6	392	54.9
		NB Right	57	59			68.0	392	
SB	75.0	SB Through	59	59			82.8	204	
		SB Right	17	16	-1	-6%	46.2	204	
EB	81.6	EB Left	58	57	-1	-2%	108.2	171	
		EB Through	3326	3402			81.5	4799	
		EB Right	18	21			17.8	3	
WB	5.9	WB Left	57	50	-7	-12%	121.6	172	
		WB Through	1927	1925	-2		2.9	167	
		WB Right	27	27			2.0	175	
Route 50 at Hudson Street (Unsignalized)									
NB	159.1	NB Right	131	129	-2	-2%	159.1	482	7.0
EB	5.2	EB Through	3379	3469			5.2	319	
		EB Right	4	6			2.4	281	
WB	0.3	WB Through	2011	1951	-60	-3%	0.3	0	
Route 50 at Highland Street (Unsignalized)									
NB	69.0	NB Right	63	63			69.0	159	5.0
SB	8.1	SB Right	27	27			8.1	48	
EB	6.3	EB Through	3510	3619			6.3	284	
		EB Right	0	0			1.0	264	
WB	0.7	WB Through	1984	1972	-12	-1%	0.7	168	
		WB Right	5	5			1.8	168	

2030 Build 1C AM Peak Hour									
Approach	Approach Delay (sec/veh)	Movement	Volume Input	Volume Throughput	Vehicles Not Served	Percent Unserved	Delay (sec/veh)	Max Queue Length (feet)	Intersection Delay (sec/veh)
Route 50 at Garfield Street (Unsignalized)									
NB	1833.0	NB Right	72	30	-42	-58%	1833.0	963	15.7
SB	8.9	SB Right	9	9			8.9	41	
EB	9.1	EB Through	3570	3678			9.1	303	
		EB Right	3	4			8.6	287	
WB	0.4	WB Through	1980	1966	-14	-1%	0.4	48	
		WB Right	1	1			1.7	47	
Route 50 at Fenwick Street (Unsignalized)									
NB	338.7	NB Right	27	29			338.7	183	10.7
SB	8.4	SB Right	3	3			8.4	39	
EB	13.6	EB Through	3638	3638			13.6	338	
		EB Right	4	5			17.7	319	
WB	0.4	WB Through	1978	1963	-15	-1%	0.4	0	
		WB Right	2	3			-0.2	0	
Route 50 at Fillmore Street (Signalized)									
NB	119.2	NB Left	186	180	-6	-3%	143.4	1486	40.8
		NB Right	301	286	-15	-5%	104.0	1342	
SB	39.8	SB Left	48	47	-1	-2%	86.4	263	
		SB Right	76	77			11.4	170	
EB	40.4	EB Left	42	46			86.7	142	
		EB Through	3589	3624			39.8	1433	
		EB Right	34	33	-1	-3%	45.5	1437	
WB	21.5	WB Left	83	78	-5	-6%	115.4	231	
		WB Through	1718	1708	-10	-1%	17.3	534	
		WB Right	25	23	-2	-8%	17.7	534	
Fillmore Street at North frontage road (Unsignalized)									
NB	0.4	NB Through	62	63			0.5	38	19.2
		NB Right	5	6			-0.1	38	
SB	33.6	SB Left	4	5			45.7	172	
		SB Through	113	113			33.0	162	
WB	6.5	WB Left	11	11			8.2	52	
		WB Right	19	20			5.6	61	
Fillmore Street at South frontage road (Unsignalized)									
NB	114.6	NB Left	0	0			0.0	1401	88.8
		NB Through	467	443	-24	-5%	114.6	1394	
		NB Right	0	0			282.4	1234	
SB	0.7	SB Left	11	9	-2	-18%	2.3	88	
		SB Through	102	98	-4	-4%	0.6	76	
		SB Right	4	4			-0.3	76	
EB	42.9	EB Left	10	10			47.1	77	
		EB Through	2	2			25.6	75	
		EB Right	1	1			34.8	87	
WB	16.4	WB Left	3	3			19.7	41	
		WB Through	2	2			15.0	39	
		WB Right	10	10			15.8	51	

2030 Build 1C PM Peak Hour									
Approach	Approach Delay (sec/veh)	Movement	Volume Input	Volume Throughput	Vehicles Not Served	Percent Unserved	Delay (sec/veh)	Max Queue Length (feet)	Intersection Delay (sec/veh)
Glebe Road at WB Route 50 ramps (Signalized)									
NB	13.4	NB Left	352	336	-16	-5%	43.6	273	24.5
		NB Through	997	979	-18	-2%	3.0	274	
SB	27.4	SB Through	1446	1455			28.8	1076	
		SB Right	166	163	-3	-2%	15.5	105	
WB	67.8	WB Left	112	108	-4	-4%	75.6	380	
		WB Through	4	5			66.6	380	
		WB Right	119	118	-1	-1%	60.8	380	
Glebe Road at EB Route 50 ramps (Signalized)									
NB	28.4	NB Through	1206	1173	-33	-3%	29.2	850	28.8
		NB Right	87	83	-4	-5%	16.7	851	
SB	3.8	SB Through	1323	1331			4.0	238	
		SB Right	235	237			3.1	238	
EB	127.9	EB Left	143	139	-4	-3%	159.3	960	
		EB Right	255	261			111.2	911	
Route 50 at Old Glebe Rd (Unsignalized)									
NB	9.4	NB Right	19	19			9.4	42	1.2
EB	0.4	EB Through	2445	2439	-6		0.4	0	
		EB Right	13	13			0.8	0	
WB	1.8	WB Through	3486	3422	-64	-2%	1.8	501	
Route 50 at Jackson Street (Unsignalized)									
SB	19.8	SB Right	54	54			19.8	83	0.9
EB	1.0	EB Through	2464	2458	-6		1.0	197	
WB	0.6	WB Through	3432	3370	-62	-2%	0.6	100	
		WB Right	11	10	-1	-9%	1.2	100	
Route 50 at Irving Street (Signalized)									
NB	54.0	NB Through	67	70			60.6	209	23.4
		NB Right	29	26	-3	-10%	36.1	209	
SB	66.7	SB Through	134	138			70.6	364	
		SB Right	65	62	-3	-5%	58.0	364	
EB	21.8	EB Left	75	73	-2	-3%	106.6	207	
		EB Through	2260	2235	-25	-1%	19.6	778	
		EB Right	129	126	-3	-2%	12.4	112	
WB	21.1	WB Left	148	148			81.4	257	
		WB Through	3378	3324	-54	-2%	18.5	1362	
		WB Right	28	25	-3	-11%	17.9	1369	
Route 50 at Hudson Street (Unsignalized)									
NB	9.8	NB Right	21	21			9.8	43	2.8
EB	0.5	EB Through	2267	2241	-26	-1%	0.5	76	
		EB Right	22	20	-2	-9%	-0.5	76	
WB	4.3	WB Through	3554	3351	-203	-6%	4.3	269	
Route 50 at Highland Street (Unsignalized)									
NB	12.3	NB Right	5	5			12.3	28	2.8
SB	34.0	SB Right	66	66			34.0	119	
EB	1.3	EB Through	2283	2265	-18	-1%	1.3	240	
		EB Right	5	5			1.1	240	
WB	3.2	WB Through	3488	3434	-54	-2%	3.2	289	
		WB Right	2	2			3.4	289	

2030 Build 1C PM Peak Hour									
Approach	Approach Delay (sec/veh)	Movement	Volume Input	Volume Throughput	Vehicles Not Served	Percent Unserved	Delay (sec/veh)	Max Queue Length (feet)	Intersection Delay (sec/veh)
Route 50 at Garfield Street (Unsignalized)									
NB	14.3	NB Right	8	8			14.3	36	3.1
SB	25.7	SB Right	50	50			25.7	94	
EB	2.9	EB Through	2281	2278	-3		2.9	297	
		EB Right	7	8			2.4	297	
WB	2.8	WB Through	3440	3392	-48	-1%	2.8	333	
		WB Right	5	7			2.6	330	
Route 50 at Fenwick Street (Unsignalized)									
NB	32.4	NB Right	8	8			32.4	37	3.7
SB	17.0	SB Right	4	4			17.0	38	
EB	7.5	EB Through	2272	2188	-84	-4%	7.6	329	
		EB Right	17	20			5.1	329	
WB	1.1	WB Through	3441	3390	-51	-1%	1.2	201	
		WB Right	1	1			1.0	201	
Route 50 at Fillmore Street (Signalized)									
NB	190.3	NB Left	315	292	-23	-7%	210.4	1675	42.4
		NB Right	194	179	-15	-8%	157.5	841	
SB	25.8	SB Left	48	50			68.3	190	
		SB Right	146	145	-1	-1%	11.2	168	
EB	25.8	EB Left	85	87			73.5	179	
		EB Through	2137	2132	-5		23.8	1144	
		EB Right	58	56	-2	-3%	25.9	1148	
WB	33.7	WB Left	313	306	-7	-2%	85.4	566	
		WB Through	2981	2942	-39	-1%	28.4	1129	
		WB Right	8	8			27.3	1129	
Fillmore Street at North frontage road (Unsignalized)									
NB	0.5	NB Through	82	83			0.6	32	13.0
		NB Right	11	11			-0.2	32	
SB	20.1	SB Left	2	2			31.7	120	
		SB Through	182	182			20.0	110	
WB	8.3	WB Left	12	12			11.3	47	
		WB Right	16	16			6.1	56	
Fillmore Street at South frontage road (Unsignalized)									
NB	185.1	NB Left	0	0			0.0	1605	101.3
		NB Through	482	445	-37	-8%	185.8	1595	
		NB Right	8	9			154.9	761	
SB	0.6	SB Left	13	12	-1	-8%	0.1	60	
		SB Through	351	343	-8	-2%	0.6	60	
		SB Right	7	6	-1	-14%	-0.3	60	
EB	23.2	EB Left	2	1	-1	-50%	106.3	40	
		EB Through	7	8			19.2	37	
		EB Right	7	6	-1	-14%	14.7	50	
WB	80.3	WB Left	3	2	-1	-33%	54.5	165	
		WB Through	2	2			63.3	163	
		WB Right	25	20	-5	-20%	84.5	175	

2030 Build 2 AM Peak Hour									
Approach	Approach Delay (sec/veh)	Movement	Volume Input	Volume Throughput	Vehicles Not Served	Percent Unserved	Delay (sec/veh)	Max Queue Length (feet)	Intersection Delay (sec/veh)
Glebe Road at WB Route 50 ramps (Signalized)									
NB	7.5	NB Left	416	422			22.9	289	18.3
		NB Through	1381	1409			2.9	279	
SB	22.0	SB Through	834	845			24.3	561	
		SB Right	132	130	-2	-2%	7.0	80	
WB	86.1	WB Left	49	46	-3	-6%	81.6	434	
		WB Through	9	7	-2	-22%	82.5	434	
		WB Right	192	184	-8	-4%	87.4	434	
Glebe Road at EB Route 50 ramps (Signalized)									
NB	28.3	NB Through	1685	1692			28.7	1194	31.0
		NB Right	110	105	-5	-5%	22.5	1194	
SB	2.9	SB Through	745	757			3.1	139	
		SB Right	138	137	-1	-1%	1.6	139	
EB	109.1	EB Left	112	113			99.5	551	
		EB Right	278	272	-6	-2%	113.1	1162	
Route 50 at Old Glebe Rd (Unsignalized)									
NB	211.7	NB Right	16	13	-3	-19%	211.7	120	8.5
EB	12.2	EB Through	3386	3477			12.2	1797	
		EB Right	1	1			12.2	1797	
WB	0.6	WB Through	1965	1985			0.6	38	
Route 50 at Jackson Street (Unsignalized)									
SB	10.7	SB Right	25	25			10.7	53	10.5
EB	16.2	EB Through	3402	3496			16.2	655	
WB	0.3	WB Through	1940	1943			0.3	12	
		WB Right	4	3	-1	-25%	0.5	12	
Route 50 at Irving Street (Signalized)									
NB	99.1	NB Left	98	94	-4	-4%	102.2	573	35.5
		NB Through	74	76			103.7	573	
		NB Right	40	42			83.8	573	
SB	71.5	SB Left	14	15			92.2	171	
		SB Through	25	25			79.2	171	
		SB Right	17	17			41.8	172	
EB	49.1	EB Through	3384	3454			49.3	3050	
		EB Right	18	21			16.5	6	
WB	1.2	WB Through	1829	1825	-4		1.2	116	
		WB Right	10	10			1.1	124	
Route 50 at Hudson Street (Unsignalized)									
NB	160.6	NB Right	131	130	-1	-1%	160.6	440	7.1
EB	5.1	EB Through	3434	3517			5.1	319	
		EB Right	4	6			2.9	279	
WB	0.1	WB Through	1839	1833	-6		0.1	3	
Route 50 at Highland Street (Unsignalized)									
NB	65.5	NB Right	63	63			65.5	145	5.2
SB	7.4	SB Right	27	27			7.4	48	
EB	6.6	EB Through	3565	3673			6.6	280	
		EB Right	0	0			0.0	260	
WB	0.3	WB Through	1812	1804	-8		0.3	7	
		WB Right	5	4	-1	-20%	0.6	7	

2030 Build 2 AM Peak Hour									
Approach	Approach Delay (sec/veh)	Movement	Volume Input	Volume Throughput	Vehicles Not Served	Percent Unserved	Delay (sec/veh)	Max Queue Length (feet)	Intersection Delay (sec/veh)
Route 50 at Garfield Street (Unsignalized)									
NB	340.6	NB Right	72	68	-4	-6%	340.6	424	8.9
SB	7.4	SB Right	9	9			7.4	41	
EB	7.0	EB Through	3625	3744			7.0	308	
		EB Right	3	4			11.5	291	
WB	0.3	WB Through	1808	1797	-11	-1%	0.3	0	
		WB Right	1	1			0.5	0	
Route 50 at Fenwick Street (Unsignalized)									
NB	230.7	NB Right	27	29			230.7	165	8.9
SB	7.7	SB Right	3	3			7.7	39	
EB	11.3	EB Through	3693	3710			11.3	343	
		EB Right	4	4			10.4	324	
WB	0.4	WB Through	1806	1793	-13	-1%	0.4	10	
		WB Right	2	3			0.0	10	
Route 50 at Fillmore Street (Signalized)									
NB	149.0	NB Left	71	69	-2	-3%	187.6	1231	41.2
		NB Through	56	55	-1	-2%	187.1	1231	
		NB Right	301	286	-15	-5%	132.3	1201	
SB	71.6	SB Left	34	32	-2	-6%	100.5	384	
		SB Through	69	71			95.1	384	
		SB Right	41	39	-2	-5%	5.1	104	
EB	36.5	EB Left	83	91			95.1	190	
		EB Through	3603	3696			35.0	1437	
		EB Right	34	33	-1	-3%	36.7	1441	
WB	24.3	WB Left	105	99	-6	-6%	176.2	325	
		WB Through	1696	1685	-11	-1%	15.5	488	
		WB Right	25	23	-2	-8%	15.7	488	
Fillmore Street at North frontage road (Unsignalized)									
NB	0.5	NB Through	159	164			0.6	51	28.7
		NB Right	5	5			-0.3	51	
SB	67.2	SB Left	4	5			68.6	304	
		SB Through	133	132	-1	-1%	67.2	294	
WB	12.1	WB Left	11	11			19.4	59	
		WB Right	19	20			8.1	68	
Fillmore Street at South frontage road (Unsignalized)									
NB	142.6	NB Left	0	0			0.0	1133	91.4
		NB Through	408	387	-21	-5%	142.6	1126	
		NB Right	0	0			178.6	1093	
SB	0.8	SB Left	11	10	-1	-9%	4.3	115	
		SB Through	193	189	-4	-2%	0.6	104	
		SB Right	4	4			-0.3	104	
EB	67.2	EB Left	10	10			74.8	93	
		EB Through	2	2			57.0	90	
		EB Right	1	1			11.1	102	
WB	18.6	WB Left	3	3			14.8	40	
		WB Through	2	2			13.0	38	
		WB Right	10	10			20.9	50	

2030 Build 2 PM Peak Hour									
Approach	Approach Delay (sec/veh)	Movement	Volume Input	Volume Throughput	Vehicles Not Served	Percent Unserved	Delay (sec/veh)	Max Queue Length (feet)	Intersection Delay (sec/veh)
Glebe Road at WB Route 50 ramps (Signalized)									
NB	13.6	NB Left	352	335	-17	-5%	44.2	272	24.8
		NB Through	997	967	-30	-3%	3.0	273	
SB	27.4	SB Through	1446	1456			28.8	1096	
		SB Right	166	163	-3	-2%	15.3	40	
WB	68.8	WB Left	112	109	-3	-3%	73.6	365	
		WB Through	4	5			75.6	365	
		WB Right	119	119			64.2	365	
Glebe Road at EB Route 50 ramps (Signalized)									
NB	36.0	NB Through	1206	1159	-47	-4%	36.9	980	28.5
		NB Right	87	82	-5	-6%	23.0	980	
SB	3.9	SB Through	1323	1332			4.0	236	
		SB Right	235	237			3.1	236	
EB	103.8	EB Left	143	136	-7	-5%	129.6	888	
		EB Right	255	255			90.1	660	
Route 50 at Old Glebe Rd (Unsignalized)									
NB	9.2	NB Right	19	19			9.2	43	1.4
EB	0.4	EB Through	2445	2436	-9		0.4	0	
		EB Right	13	13			0.8	0	
WB	2.1	WB Through	3486	3453	-33	-1%	2.1	542	
Route 50 at Jackson Street (Unsignalized)									
SB	14.5	SB Right	54	54			14.5	70	0.6
EB	0.3	EB Through	2464	2455	-9		0.3	58	
WB	0.6	WB Through	3432	3387	-45	-1%	0.6	110	
		WB Right	11	10	-1	-9%	1.7	110	
Route 50 at Irving Street (Signalized)									
NB	93.1	NB Left	147	148			93.6	518	9.7
		NB Through	39	39			94.4	518	
		NB Right	9	9			78.3	518	
SB	52.3	SB Left	24	26			57.1	292	
		SB Through	61	62			59.9	292	
		SB Right	65	62	-3	-5%	42.6	292	
EB	11.5	EB Through	2335	2324	-11		11.8	611	
		EB Right	129	126	-3	-2%	7.1	43	
WB	1.1	WB Through	3231	3184	-47	-1%	1.1	147	
		WB Right	8	7	-1	-13%	3.0	153	
Route 50 at Hudson Street (Unsignalized)									
NB	14.1	NB Right	21	21			14.1	51	0.7
EB	1.3	EB Through	2346	2336	-10		1.3	174	
		EB Right	22	20	-2	-9%	0.0	174	
WB	0.2	WB Through	3239	3192	-47	-1%	0.2	30	
Route 50 at Highland Street (Unsignalized)									
NB	20.5	NB Right	5	5			20.5	28	2.2
SB	14.3	SB Right	66	66			14.3	78	
EB	4.3	EB Through	2362	2358	-4		4.3	285	
		EB Right	5	5			4.2	285	
WB	0.3	WB Through	3173	3127	-46	-1%	0.3	11	
		WB Right	2	2			0.5	11	

2030 Build 2 PM Peak Hour									
Approach	Approach Delay (sec/veh)	Movement	Volume Input	Volume Throughput	Vehicles Not Served	Percent Unserved	Delay (sec/veh)	Max Queue Length (feet)	Intersection Delay (sec/veh)
Route 50 at Garfield Street (Unsignalized)									
NB	25.3	NB Right	8	8			25.3	38	4.4
SB	15.4	SB Right	50	50			15.4	78	
EB	9.4	EB Through	2360	2376			9.4	307	
		EB Right	7	8			7.0	307	
WB	0.4	WB Through	3125	3081	-44	-1%	0.4	37	
		WB Right	5	6			1.0	55	
Route 50 at Fenwick Street (Unsignalized)									
NB	53.5	NB Right	8	8			53.5	40	6.8
SB	11.0	SB Right	4	4			11.0	37	
EB	15.4	EB Through	2351	2222	-129	-5%	15.4	343	
		EB Right	17	15	-2	-12%	9.9	343	
WB	0.4	WB Through	3126	3085	-41	-1%	0.4	0	
		WB Right	1	1			0.1	0	
Route 50 at Fillmore Street (Signalized)									
NB	456.7	NB Left	148	128	-20	-14%	496.9	2186	66.0
		NB Through	68	58	-10	-15%	490.4	2186	
		NB Right	194	170	-24	-12%	415.0	1386	
SB	51.4	SB Left	24	24			66.0	438	
		SB Through	146	149			66.7	438	
		SB Right	73	72	-1	-1%	14.8	144	
EB	44.7	EB Left	140	143			74.9	194	
		EB Through	2161	2167			42.7	1313	
		EB Right	58	56	-2	-3%	43.1	1317	
WB	39.9	WB Left	388	369	-19	-5%	128.7	888	
		WB Through	2906	2876	-30	-1%	28.6	1080	
		WB Right	8	8			28.1	1080	
Fillmore Street at North frontage road (Unsignalized)									
NB	0.5	NB Through	205	199	-6	-3%	0.6	20	24.1
		NB Right	11	11			-0.2	20	
SB	47.2	SB Left	2	2			52.3	362	
		SB Through	231	232			47.1	352	
WB	8.6	WB Left	12	12			10.0	48	
		WB Right	16	16			7.6	57	
Fillmore Street at South frontage road (Unsignalized)									
NB	448.3	NB Left	0	0			0.0	2115	159.4
		NB Through	383	327	-56	-15%	448.8	2105	
		NB Right	8	7	-1	-13%	424.2	1309	
SB	0.6	SB Left	13	13			0.8	67	
		SB Through	572	556	-16	-3%	0.6	67	
		SB Right	7	6	-1	-14%	-0.4	67	
EB	39.4	EB Left	2	2			143.9	46	
		EB Through	7	8			20.5	43	
		EB Right	7	7			31.2	56	
WB	48.5	WB Left	3	3			62.0	79	
		WB Through	2	2			26.8	78	
		WB Right	25	24	-1	-4%	48.6	90	

Appendix H –Planning Level Cost Estimates

ROUTE 50 ALTERNATIVE 1A

DETAILED PROJECT COST ESTIMATE SUMMARY

(Version: 1/21/2020 - CTS Modified)

Portal ID:		Project UPC:	
Prepared By:	WRA	Milestone	Creation/Pre Scope
Reviewed By:		Date:	Mar-20
County/City/Town:	Arlington County (00)	Tier Level	2

Preliminary Engineering

Project Estimate Component		Proposed Project Cost Estimate ($)		
Discipline	Source	Base ($)	Contingency (%)	Total
Roadway	Consultant	$ 410,000	15.00%	$471,500
Hydraulics	Consultant	$ 160,000	15.00%	$184,000
In-plan Utilities	Consultant	$ 28,000	15.00%	$32,200
Traffic	Consultant	$ 97,000	15.00%	$111,550
Structures/Bridges				$0
Materials/Geotech	Consultant	$ 100,000	15.00%	$115,000
Survey	Consultant	$ 150,000	15.00%	$172,500
Environmental	Consultant	$ 50,000	15.00%	$57,500
Right of Way	Consultant	$ 80,000	15.00%	$92,000
Other	Consultant	$ 80,000	10.00%	$88,000
VDOT Oversight Costs				$0
Total PE Phase Estimate		$ 1,155,000	14.65%	$1,324,250
PE Base Estimate Date (XX/XX/XXXX)		3/26/2020		
PE Phase Dates (XX/XX/XXXX)	Start Date	1/1/2021	End Date	1/1/2022

Right-of-Way & Utilities

Discipline	Source	Base ($)	Contingency (%)	Total
Right-of-Way	Aerial Photo	$430,000	50.00%	$645,000
Out-of-Plan Utilities (power, cable, gas, etc.)	Aerial Photo	$1,200,000	50.00%	$1,800,000
VDOT Oversight Costs				$0
Total RW Phase Estimate		$1,630,000	50.00%	$2,445,000
RW Base Estimate Date (XX/XX/XXXX)		3/26/2020		
RW Phase Dates (XX/XX/XXXX)	Start Date	1/1/2022	End Date	1/1/2023

Construction

Discipline	Source	Base ($)	Contingency (%)	Total
Mobilization	Consultant	$450,000	40.00%	$630,000
MOT	Consultant	$590,000	40.00%	$826,000
Roadway	Consultant	$2,096,500	40.00%	$2,935,100
Hydraulics	Consultant	$1,683,500	40.00%	$2,356,900
In-plan Utilities	PCES	$280,000	40.00%	$392,000
Traffic	Consultant	$970,000	40.00%	$1,358,000
Structures/Bridges				$0
Materials/Geotech				$0
Soundwalls				$0
Other	Consultant	$1,601,865	40.00%	$2,242,611
Total Bid Items		$7,671,865	40.00%	$10,740,611
Incidental-Claims & Work Orders (Percentage of Bid Items)	5% to 10% max	739,100		739,100
Railroad Flagging/Coordination				0
State Forces				0
State Police				0
Contract Requirements (Incentive/Disincentive)	5%	370,000		370,000
Construction Engineering (Inspection)	Environmental Inspection ($)			0
	VDOT or Locality ($)			0
	VDOT Oversight ($)	1,293,490		1,293,490
	Total CEI			1,293,490
Total CN Phase Estimate		$10,074,455	30.46%	$13,143,201
CN Base Estimate Date (XX/XX/XXXX)		3/26/2020		
CN Phase Start Date (XX/XX/XXXX)		3/1/2023		
CN Phase End Date (XX/XX/XXXX)		9/1/2024		
Total Project Cost Estimate				$16,912,451

ROUTE 50 ALTERNATIVE 2

DETAILED PROJECT COST ESTIMATE SUMMARY

(Version: 1/21/2020 - CTS Modified)

Portal ID:		Project UPC:	
Prepared By:	WRA	Milestone	Creation/Pre Scope
Reviewed By:		Date:	Mar-20
County/City/Town:	Arlington County (00)	Tier Level	2

Preliminary Engineering

Project Estimate Component		Proposed Project Cost Estimate ($)		
Discipline	Source	Base ($)	Contingency (%)	Total
Roadway	Consultant	$ 410,000	15.00%	$471,500
Hydraulics	Consultant	$ 160,000	15.00%	$184,000
In-plan Utilities	Consultant	$ 28,000	15.00%	$32,200
Traffic	Consultant	$ 57,000	15.00%	$65,550
Structures/Bridges				$0
Materials/Geotech	Consultant	$ 100,000	15.00%	$115,000
Survey	Consultant	$ 150,000	15.00%	$172,500
Environmental	Consultant	$ 50,000	15.00%	$57,500
Right of Way	Consultant	$ 80,000	15.00%	$92,000
Other				$0
VDOT Oversight Costs				$0
Total PE Phase Estimate		$ 1,035,000	15.00%	$1,190,250
PE Base Estimate Date (XX/XX/XXXX)		3/26/2020		
PE Phase Dates (XX/XX/XXXX)	Start Date	1/1/2021	End Date	1/1/2022

Right-of-Way & Utilities

Discipline	Source	Base ($)	Contingency (%)	Total
Right-of-Way	Aerial Photo	$430,000	50.00%	$645,000
Out-of-Plan Utilities (power, cable, gas, etc.)	Aerial Photo	$1,200,000	50.00%	$1,800,000
VDOT Oversight Costs				$0
Total RW Phase Estimate		$1,630,000	50.00%	$2,445,000
RW Base Estimate Date (XX/XX/XXXX)		3/26/2020		
RW Phase Dates (XX/XX/XXXX)	Start Date	1/1/2022	End Date	1/1/2023

Construction

Discipline	Source	Base ($)	Contingency (%)	Total
Mobilization	Consultant	$349,640	40.00%	$489,496
MOT	Consultant	$450,636	40.00%	$630,890
Roadway	Consultant	$1,318,448	40.00%	$1,845,827
Hydraulics	Consultant	$1,445,000	40.00%	$2,023,000
In-plan Utilities	PCES	$280,000	40.00%	$392,000
Traffic	Consultant	$570,000	40.00%	$798,000
Structures/Bridges				$0
Materials/Geotech				$0
Soundwalls				$0
Other	Consultant	$1,219,225	40.00%	$1,706,915
Total Bid Items		$5,632,949	40.00%	$7,886,129
Incidental-Claims & Work Orders (Percentage of Bid Items)	5% to 10% max	563,295		563,295
Railroad Flagging/Coordination				0
State Forces				0
State Police				0
Contract Requirements (Incentive/Disincentive)	5%	281,648		281,648
Construction Engineering (Inspection)	Environmental Inspection ($)			0
	VDOT or Locality ($)			0
	VDOT Oversight ($)	985,766		985,766
	Total CEI			985,766
Total CN Phase Estimate		$7,463,658	30.19%	$9,716,838
CN Base Estimate Date (XX/XX/XXXX)		3/26/2020		
CN Phase Start Date (XX/XX/XXXX)		3/1/2023		
CN Phase End Date (XX/XX/XXXX)		9/1/2024		
Total Project Cost Estimate				$13,352,088

ROUTE 50 ALTERNATIVE 3

DETAILED PROJECT COST ESTIMATE SUMMARY

(Version: 1/21/2020 - CTS Modified)

Portal ID:		Project UPC:	
Prepared By:	WRA	Milestone	Creation/Pre Scope
Reviewed By:		Date:	Mar-20
County/City/Town:	Arlington County (00)	Tier Level	2

Preliminary Engineering

Project Estimate Component		Proposed Project Cost Estimate ($)		
Discipline	Source	Base ($)	Contingency (%)	Total
Roadway	Consultant	$ 110,000	15.00%	$126,500
Hydraulics	Consultant	$ 60,000	15.00%	$69,000
In-plan Utilities	Consultant	$ -	15.00%	$0
Traffic	Consultant	$ 100,000	15.00%	$115,000
Structures/Bridges				$0
Materials/Geotech	Consultant	$ 50,000	15.00%	$57,500
Survey	Consultant	$ 140,000	15.00%	$161,000
Environmental	Consultant	$ 50,000	15.00%	$57,500
Right of Way	Consultant	$ 80,000	15.00%	$92,000
Other				$0
VDOT Oversight Costs				$0
Total PE Phase Estimate		$ 590,000	15.00%	$678,500
PE Base Estimate Date (XX/XX/XXXX)		3/26/2020		
PE Phase Dates (XX/XX/XXXX)	Start Date	1/1/2021	End Date	1/1/2022

Right-of-Way & Utilities

Discipline	Source	Base ($)	Contingency (%)	Total
Right-of-Way	Aerial Photo	$100,000	50.00%	$150,000
Out-of-Plan Utilities (power, cable, gas, etc.)	Aerial Photo	$1,000,000	50.00%	$1,500,000
VDOT Oversight Costs				$0
Total RW Phase Estimate		$1,100,000	50.00%	$1,650,000
RW Base Estimate Date (XX/XX/XXXX)		3/26/2020		
RW Phase Dates (XX/XX/XXXX)	Start Date	1/1/2022	End Date	1/1/2023

Construction

Discipline	Source	Base ($)	Contingency (%)	Total
Mobilization	Consultant	$164,405	40.00%	$230,167
MOT	Consultant	$190,900	40.00%	$267,260
Roadway	Consultant	$777,103	40.00%	$1,087,944
Hydraulics	Consultant	$460,900	40.00%	$645,260
In-plan Utilities			40.00%	$0
Traffic	Consultant	$280,000	40.00%	$392,000
Structures/Bridges				$0
Materials/Geotech				$0
Soundwalls				$0
Other	Consultant	$512,672	40.00%	$717,741
Total Bid Items		$2,385,980	40.00%	$3,340,372
Incidental-Claims & Work Orders (Percentage of Bid Items)	5% to 10% max	238,598		238,598
Railroad Flagging/Coordination				0
State Forces				0
State Police				0
Contract Requirements (Incentive/Disincentive)	5%	119,299		119,299
Construction Engineering (Inspection)	Environmental Inspection ($)			0
	VDOT or Locality ($)			0
	VDOT Oversight ($)	417,546		417,546
	Total CEI			417,546
Total CN Phase Estimate		$3,161,423	30.19%	$4,115,815
CN Base Estimate Date (XX/XX/XXXX)		3/26/2020		
CN Phase Start Date (XX/XX/XXXX)		3/1/2023		
CN Phase End Date (XX/XX/XXXX)		9/1/2024		
Total Project Cost Estimate				$6,444,315